EVgo
FAST CHARGING

P17773
INSTALLATION OF ELECTRIC VEHICLES CHARGING EQUIPMENT
WAWA #0157
593 DEKALB PIKE.-EV
NORTH WALES,PA 19454

VICINITY MAP

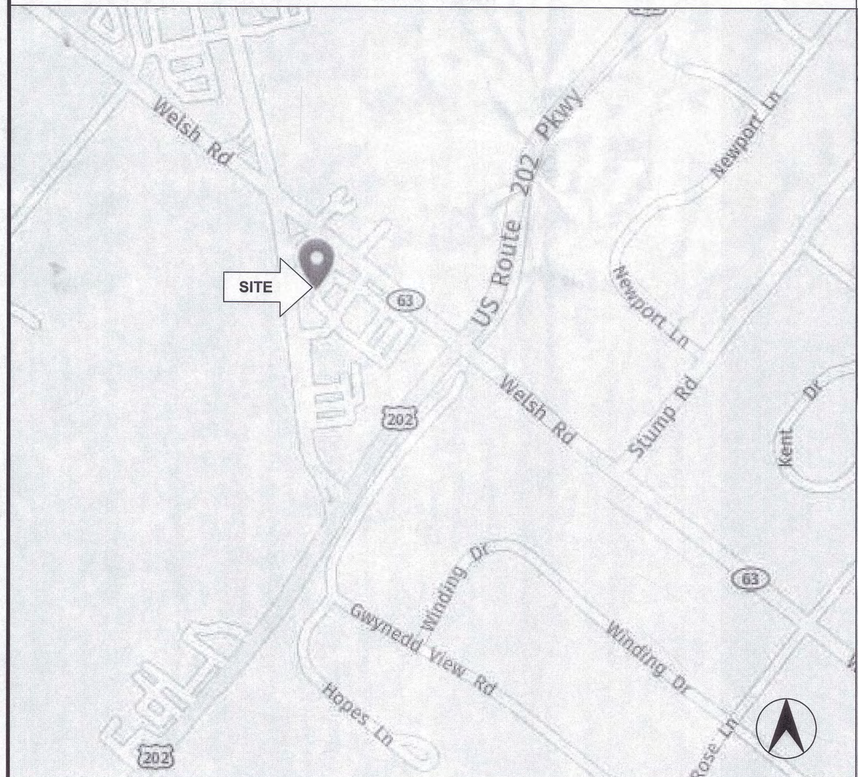

AERIAL MAP

PROJECT DESCRIPTION

- INSTALL (1) UTILITY TRANSFORMER
- INSTALL (1) SWITCHBOARD ASSEMBLY
- INSTALL (1) STEP DOWN TRANSFORMER
- INSTALL (1) METER SOCKET
- INSTALL (2) 100KW DELTA DISPENSERS
- INSTALL (1) 350KW DELTA DISPENSER
- INSTALL (1) 350KW DELTA POWER CABINET

DRAWING INDEX

SHEET NO.	SHEET TITLE	REV NO.
CS	COVER SHEET & PROJECT INFORMATION	1
C-1	OVERALL SITE PLAN	1
C-2	DEMOLITION SITE PLAN	1
C-3	ENLARGED SITE PLAN	1
D-1	DETAILS	1
D-2	DETAILS	1
D-3	DETAILS	1
D-4	DETAILS	1
E-1	ELECTRICAL UTILITY PLAN	1
E-2	ELECTRICAL ENLARGED SITE PLAN	1
E-3	ELECTRICAL SINGLE LINE DIAGRAM	1
E-4	ELECTRICAL DETAILS	1
E-5	ELECTRICAL SPECIFICATIONS	1
E-6	ELECTRICAL SPECIFICATIONS AND SWITCHBOARD/PANEL SCHEDULES	1
E-7	ELECTRICAL SYMBOLS, ABBREVIATIONS AND GENERAL NOTES	1
G-1	SCHEMATIC GROUNDING DETAILS	1
GN-1	ELECTRICAL GENERAL NOTES	1

FOR REFERENCE ONLY DRAWINGS
PROPERTY SURVEY

RHB #22-17

CONTRACTOR NOTE

CONTRACTOR SHALL COMPLETE INSTALL PER THE SIGNED AND THE SEALED SET OF DRAWINGS. ANY NECESSARY DEVIATIONS FROM THE DRAWINGS MUST BE SUBMITTED THROUGH AN RFI REQUEST PROCESS WITH ENGINEERING FOR AN APPROVAL PRIOR TO CONTRACTOR PROCEEDING WITH A DEVIATION OF THE SIGNED AND SEALED SET OF DRAWINGS.

CALL BEFORE YOU DIG

811
Know what's below
Call before you dig.

DO NOT SCALE DRAWINGS

CONTRACTOR SHALL VERIFY ALL PLANS, EXISTING DIMENSIONS & CONDITIONS ON THE JOB SITE & SHALL IMMEDIATELY NOTIFY THE ENGINEER IN WRITING OF ANY DISCREPANCIES BEFORE PROCEEDING WITH THE WORK.

ENGINEER OF RECORD

NAME
PE#
ENGINEERING COMPANY NAME

EVgo
FAST CHARGING

EVgo SERVICES, LLC
11835 W OLYMPIC BLVD STE 900 E
LOS ANGELES, CA 90064

WB Engineers+ Consultants

EV strategies

Job Name:
WAWA #0157
NORTH WALES

593 DEKALB PIKE. -EV
NORTH WALES,PA 19454

SHEET DESCRIPTION:
COVER SHEET AND PROJECT INFORMATION

COMMONWEALTH OF PENNSYLVANIA
DAVID A. CAMPBELL
PE-084143-E

Project #: P17773
File:
Drawn by: KC
Date(s): 07/25/2022
2022.07.25 – DD100 PRELIMINARY DESIGN
2022.08.08 – ISSUED FOR PERMIT

RECEIVED
SEP 01 2022
BY:

CS

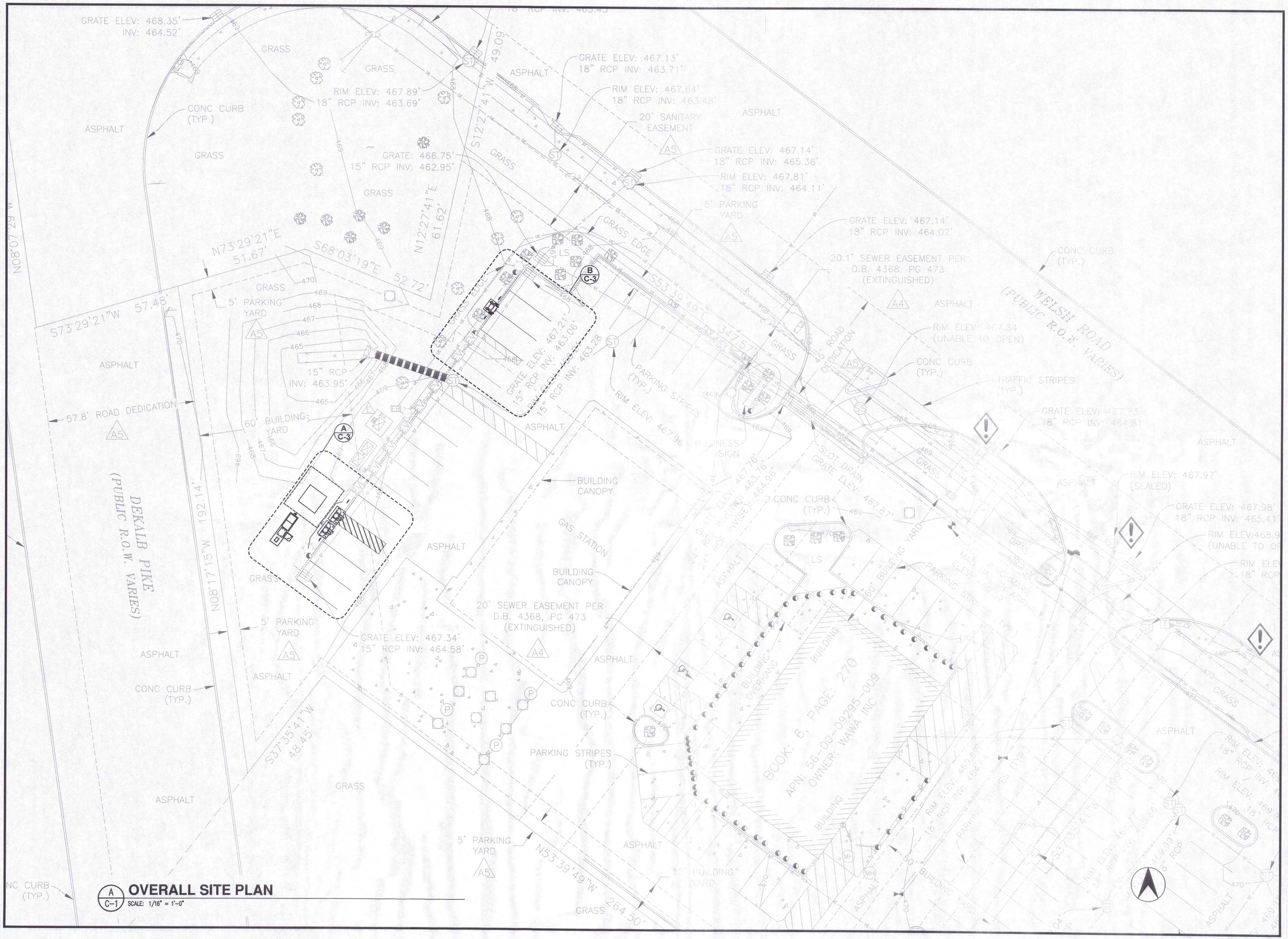

A C-1 **OVERALL SITE PLAN**
SCALE: 1/16" = 1'-0"

EVgo
FAST CHARGING

EVgo SERVICES, LLC
11835 W OLYMPIC BLVD STE 900 E
LOS ANGELES, CA 90064

WB Engineers+ Consultants

EV strategies

Job Name:
WAWA #0157
NORTH WALES

593 DEKALB PIKE -EV
NORTH WALES,PA 19454

SHEET DESCRIPTION:
OVERALL SITE PLAN

Project #: P17773
File:
Drawn by: KC
Date(s): 07/25/2022
2022.07.25 – DD100 PRELIMINARY DESIGN
2022.08.08 – ISSUED FOR PERMIT

C-1

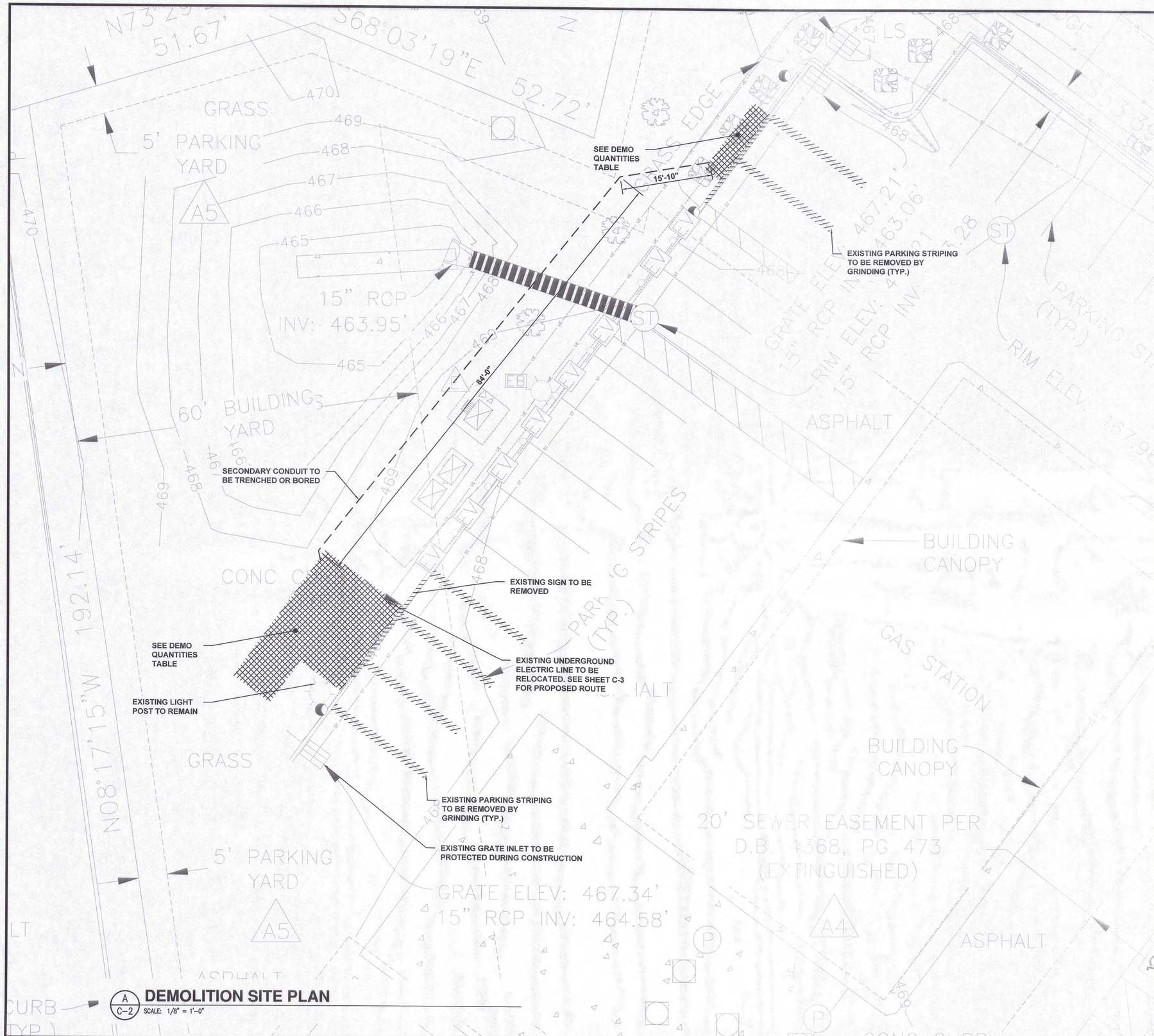

A C-2 **DEMOLITION SITE PLAN**
SCALE: 1/8" = 1'-0"

DEMO QUANTITIES TABLE

ASHPALT	-
PARKING LINES	N/A
CURB	30 SQ FT
LANDSCAPING	420 SQ FT
CONCRETE SIDE WALK	-

NOTES

1. THE CONTRACTOR SHALL RETURN SIDEWALKS, LANDSCAPING, PLANTERS, IRRIGATION SYSTEMS, AND ANY OTHER FACILITIES DISTURBED BY THE WORK TO THE SAME OR BETTER CONDITION THAN EXISTED PRIOR TO THE COMMENCEMENT OF THE WORK.
2. ALL QUANTITIES LISTED IN DEMOLITION PLAN SHEET ARE ONLY APPROXIMATIONS. THE CONTRACTOR SHALL VERIFY ALL QUANTITIES BEFORE BIDDING.
3. CONTRACTOR TO BORE SECONDARY RUN. CONTRACTOR TO PROVIDE CONDUIT AND WIRE.

EVgo FAST CHARGING

EVgo SERVICES, LLC
11835 W OLYMPIC BLVD STE 900 E
LOS ANGELES, CA 90064

WB Engineers+ Consultants

EV strategies

Job Name:
WAWA #0157
NORTH WALES

593 DEKALB PIKE, -EV
NORTH WALES,PA 19454

SHEET DESCRIPTION:
DEMOLITION SITE PLAN

Project #: P17773
File:
Drawn by: KC
Date(s): 07/25/2022
2022.07.25 – DD100 PRELIMINARY DESIGN
2022.08.08 – ISSUED FOR PERMIT

C-2

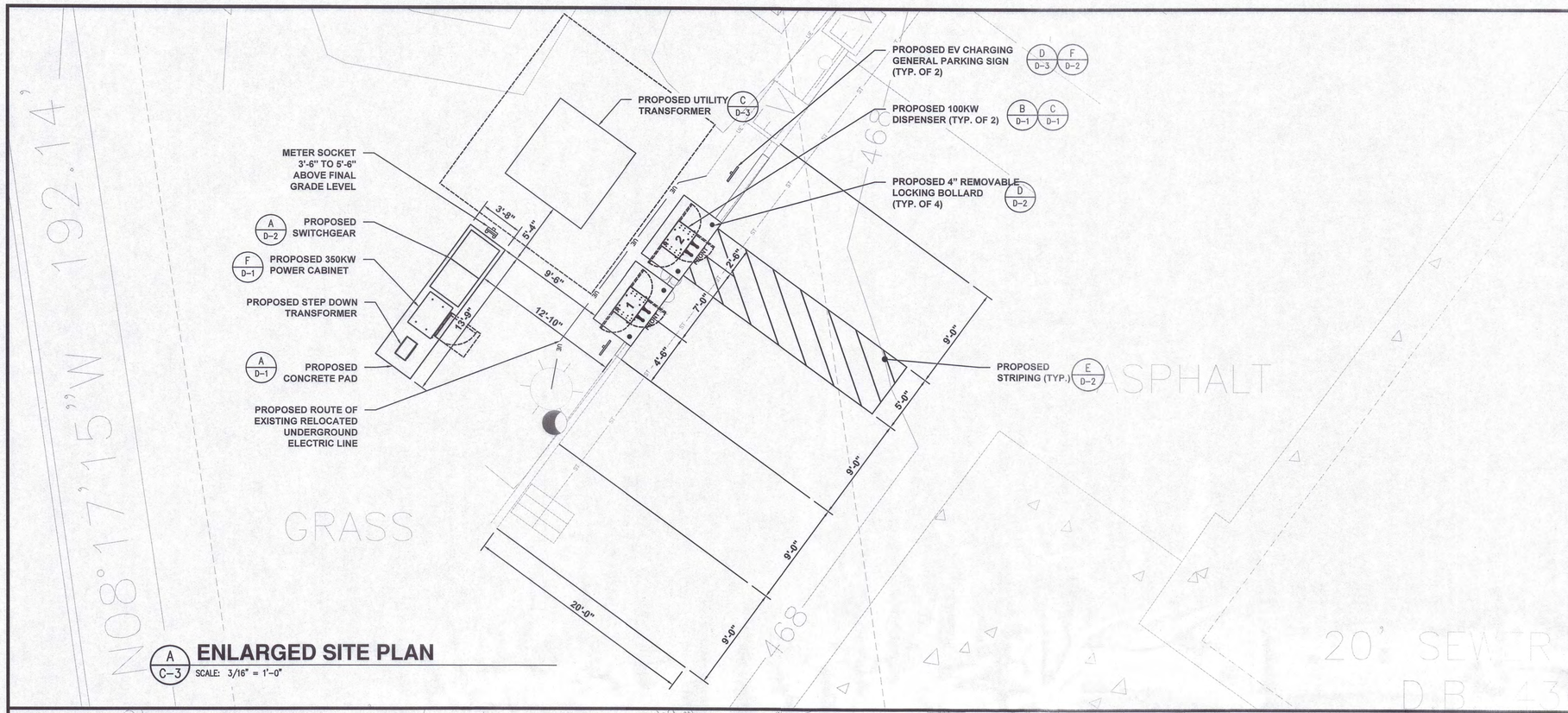

A C-3 **ENLARGED SITE PLAN**
SCALE: 3/16" = 1'-0"

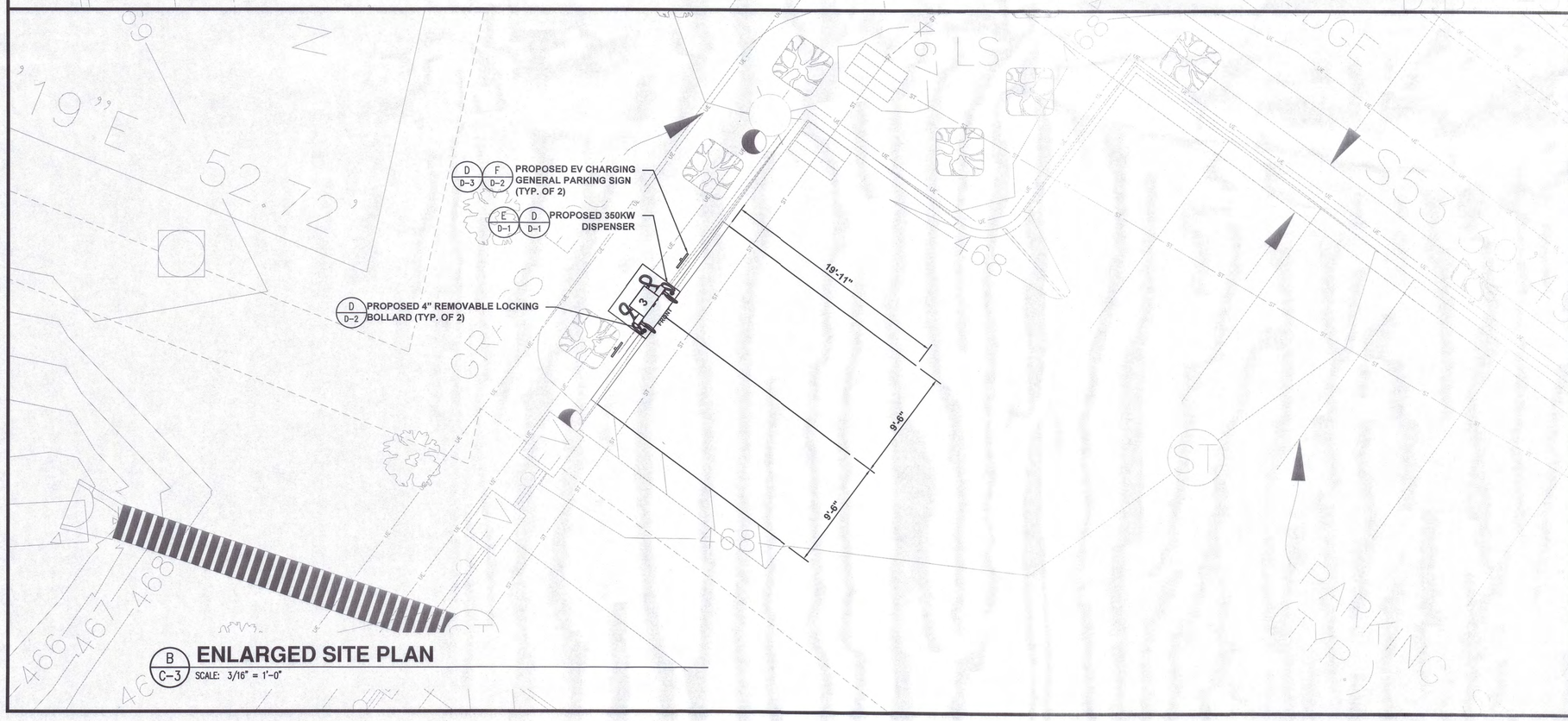

B C-3 **ENLARGED SITE PLAN**
SCALE: 3/16" = 1'-0"

PROPOSED DISPENSERS

CHARGE POST NUMBER	100KW	350KW	CABLE TYPE
1	1		CHAdeMO/CCS
2	1		CHAdeMO/CCS
3		1	CCS/CCS

PROJECT STALL COUNT

EXISTING STALL COUNT	5
PROPOSED STALL COUNT	5
SITE HOST APPROVED STALL COUNT	5

KEYNOTES

1. SOD PLANTED IN THE FALL MUST ESTABLISH ITS ROOTS BEFORE THE FIRST WINTER FROST. DETERMINE WHEN THE FIRST FROST USUALLY OCCURS, AND PLANT THE SOD NO LATER THAN ONE MONTH BEFORE THE FIRST FROST. IF THE CONSTRUCTION IS FINISHED LATER THAN ONE MONTH BEFORE THE FIRST FROST, USE STRAW UNTIL SOD CAN BE INSTALLED.
2. THE CONTRACTOR SHALL RETURN SIDEWALKS, LANDSCAPING, PLANTERS, IRRIGATION SYSTEMS, AND ANY OTHER FACILITIES DISTURBED BY THE WORK TO THE SAME OR BETTER CONDITION THAN EXISTED PRIOR TO THE COMMENCEMENT OF THE WORK.
3. CONTRACTOR TO PROVIDE CONDUIT AND WIRE AND BORE UTILITY RUN.

6' 4' 2' 0 5' 10'
3/16"=1'-0"

EVgo FAST CHARGING

EVgo SERVICES, LLC
11835 W OLYMPIC BLVD STE 900 E
LOS ANGELES, CA 90064

WB Engineers+ Consultants

EV strategies

Job Name:
WAWA #0157
NORTH WALES

593 DEKALB PIKE. -EV
NORTH WALES,PA 19454

SHEET DESCRIPTION:
ENLARGED SITE PLAN

COMMONWEALTH OF PENNSYLVANIA REGISTERED PROFESSIONAL ENGINEER DAVID CONTINI

Project #: P17773
File:
Drawn by: KC
Date(s): 07/25/2022
2022.07.25 – DD100 PRELIMINARY DESIGN
2022.08.08 – ISSUED FOR PERMIT

C-3

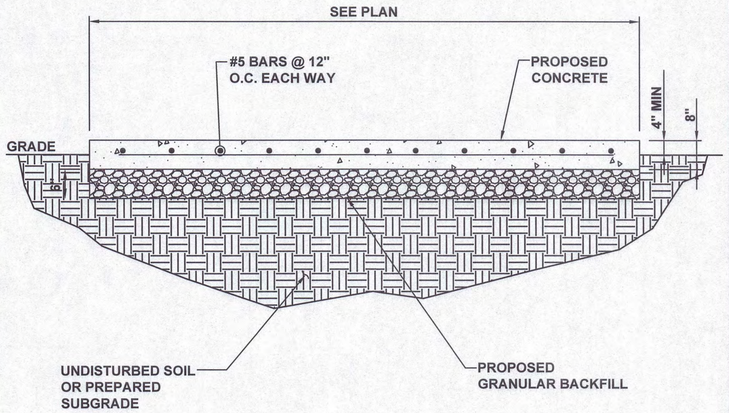

A / D-1 CONCRETE PAD DETAIL

SCALE: N.T.S.

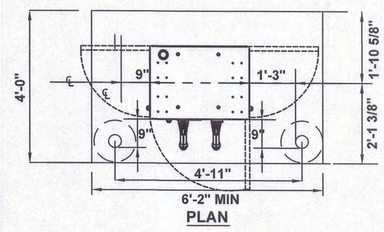

PLAN

NOTES

1. OPERABLE PARTS OF DISPENSER SHALL NOT EXCEED 48" ABOVE PARKING SURFACE.
2. BOLLARDS ARE FOR WARNING PURPOSE ONLY.
3. FINAL FOOTING CALCULATIONS AND SIZING TO BE DETERMINED BY ENGINEER OF RECORD PRIOR TO CONSTRUCTION.
4. LEAVE A MINIMUM OF 22" (560 MM) IN FRONT OF THE CHARGER FOR FRONT DOOR.
5. LEAVE A MINIMUM OF 21.6" (550 MM) ON BOTH SIDES.
6. LEAVE A MINIMUM OF 8.7" (220 MM) IN THE BACK OF THE CHARGER.

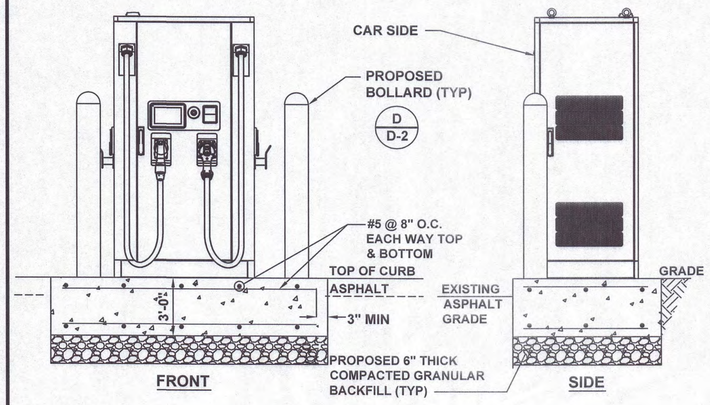

B / D-1 DISPENSER FOOTING DETAIL (100KW)

SCALE: N.T.S.

NOTES

1. CONTRACTOR TO DRILL FOUR M12 HOLES FOR INSTALLING THE CHARGER. DRILL SIX 30 MM (1.18")-DIAMTER HOLES WITH OR A RECTANGLE WITH A WIDTH OF 250 MM (9.84") AND A DEPTH OF 130 MM (5.18") FOR HOLDING THE POWER CABLES AND THE ETHERNET CABLE.
2. CONTRACTOR TO DRILL AND TAP 4 HOLES (M12) INTO THE CEMENT BASE AT THE INDICATED POSITIONS (A).
3. CONTRACTOR TO MAKE SURE THAT THE CABLES EMERGE FROM THE FLOOR THROUGH THE 6 MARKED HOLES (B).
4. CONTRACTOR TOMAKE SURE THAT A CABLE LENGTH OF 0.6M IS AVAILABLE ABOVE THE FLOOR FOR INTERNAL ROUTING IN THE CABINET.

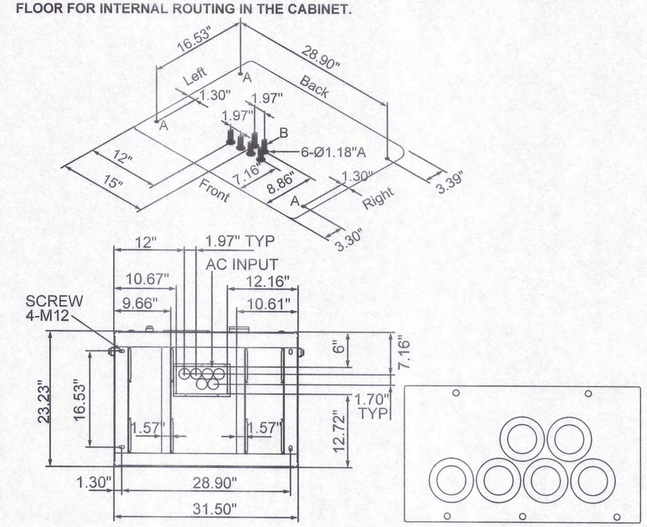

C / D-1 DISPENSER ANCHORAGE AND CONDUIT ENTRY DETAIL

SCALE: N.T.S.

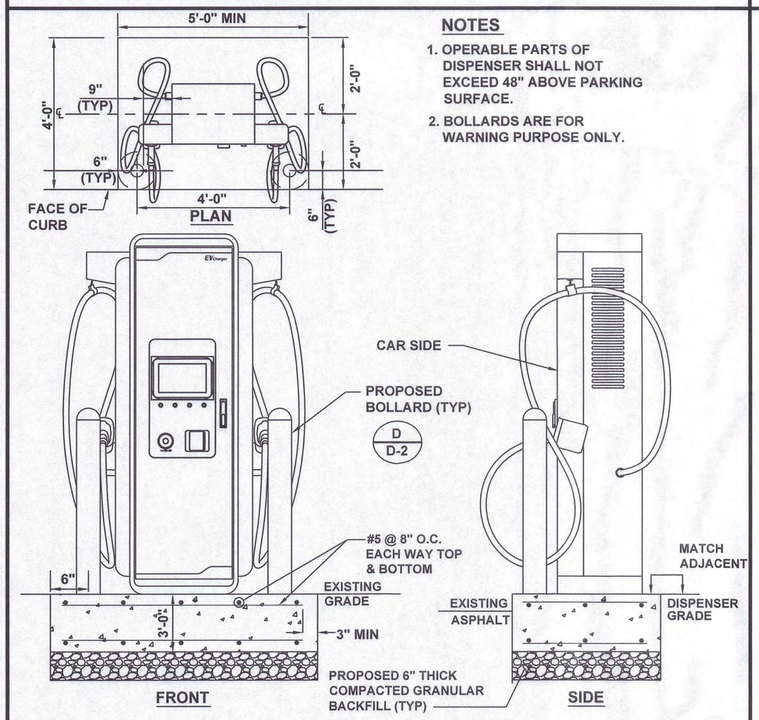

NOTES

1. OPERABLE PARTS OF DISPENSER SHALL NOT EXCEED 48" ABOVE PARKING SURFACE.
2. BOLLARDS ARE FOR WARNING PURPOSE ONLY.

D / D-1 DELTA DISPENSER FOOTING DETAIL (350KW)

SCALE: N.T.S.

NOTES

1. MINIMUM CONCRETE EDGE DISTANCE FOR PROPOSED ANCHORS SHALL BE 6".
2. CONTRACTOR TO FIELD VERIFY THE ANCHOR SPACING PER MANUFACTURER'S INSTALLATION MANUAL.
3. CONTRACTOR TO REFER TO THE INSTALLATION MANUAL FOR ANCHORAGE AND CONDUIT ENTRY DETAILS.

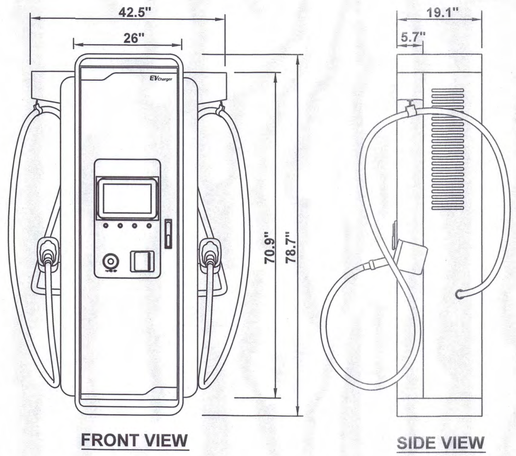

E / D-1 DISPENSER DETAIL (350KW)

SCALE: N.T.S.

NOTES

1. MINIMUM CONCRETE EDGE DISTANCE FOR PROPOSED ANCHORS SHALL BE 6".
2. CONTRACTOR TO FIELD VERIFY THE ANCHOR SPACING PER MANUFACTURER'S INSTALLATION MANUAL.
3. CONTRACTOR TO REFER TO THE INSTALLATION MANUAL FOR ANCHORAGE AND CONDUIT ENTRY DETAILS.

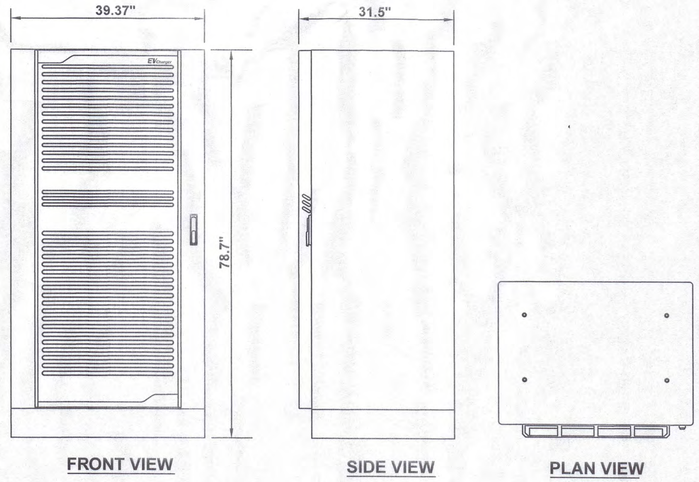

F / D-1 POWER CABINET DETAIL (350KW)

SCALE: N.T.S.

EVgo
FAST CHARGING

EVgo SERVICES, LLC
11835 W OLYMPIC BLVD STE 900 E
LOS ANGELES, CA 90064

WB Engineers+ Consultants

EV strategies

Job Name:
WAWA #0157
NORTH WALES

593 DEKALB PIKE. -EV
NORTH WALES,PA 19454

SHEET DESCRIPTION:
DETAILS

Project #: P17773
File:
Drawn by: KC
Date(s): 07/25/2022
2022.07.25 – DD100 PRELIMINARY DESIGN
2022.08.08 – ISSUED FOR PERMIT

D-1

NOTES

1. SEE FLOOR PLAN IN REFERENCED SWITCHBOARD ASSEMBLY DRAWINGS FOR MOUNTING HOLE LOCATION AND SWITCHBOARD BAY DIMENSIONS.
2. SEE ELEVATION IN REFERENCED SWITCHBOARD ASSEMBLY DRAWINGS FOR BASE CHANNEL DIMENSION.
3. MINIMUM 10 1/2" CONCRETE EDGE DISTANCE REQUIRED FOR PROPOSED ANCHORAGE.

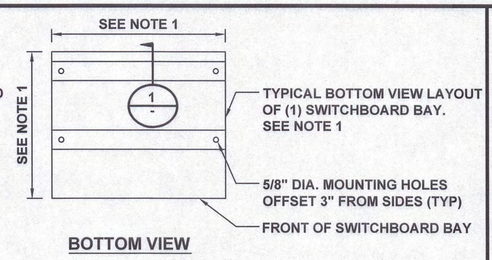

BOTTOM VIEW

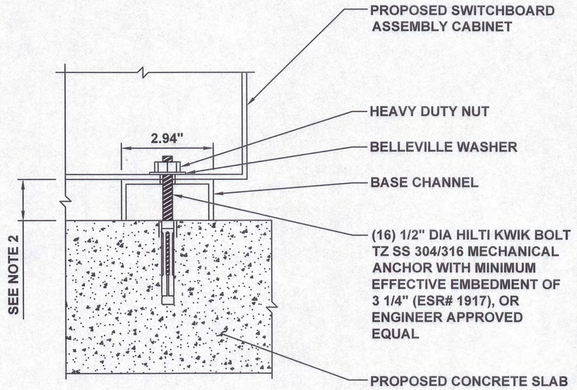

SECTION 1

A / D-2 SWITCHBOARD MOUNTING DETAIL

SCALE: N.T.S.

NOTES

1. BOLLARD IS FOR WARNING PURPOSES ONLY.
2. BOLLARD DETAIL FOR BOLLARDS AROUND EV GO EQUIPMENT.
3. BOLLARD LIVE LOAD 33,610 PSI.

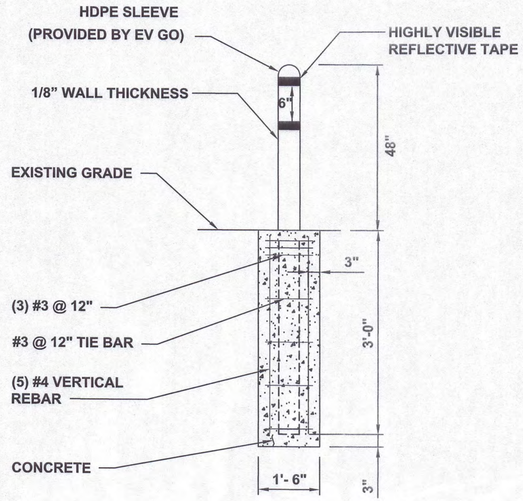

B / D-2 WARNING BOLLARD DETAIL

SCALE: N.T.S.

C / D-2 NOT USED

SCALE: N.T.S.

NOTES

1. BOLLARD DETAIL FOR BOLLARDS INFRONT OF EVGO CHARGING DISPENSERS.
2. PRODUCT DETAILS: EVE LOCKING BOLLARD CAP, PART NUMBER: 00001
3. BOLLARD LIVE LOAD 33,610 PSI.
4. PURCHASE BOLLARD CAPS AT WWW.EVEINITIATIVES.COM.

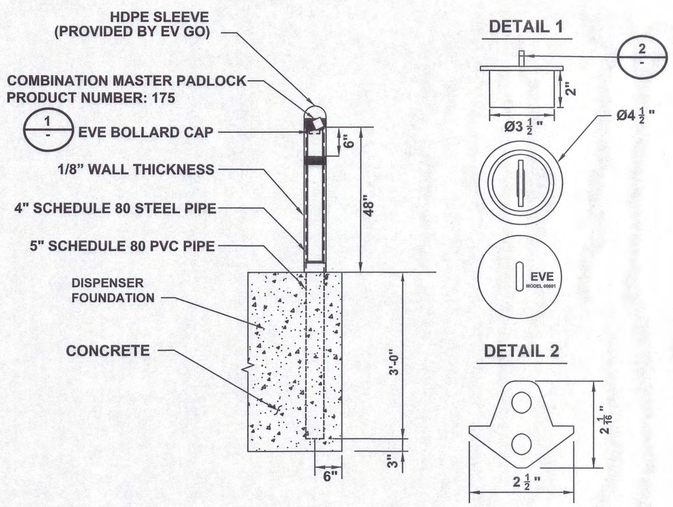

D / D-2 4 REMOVABLE LOCKING BOLLARD

SCALE:

NOTES

1. PROPOSED ACCESSIBLE STALLS AND ACCESS AISLE SHALL BE 2% MAX SLOPE IN ALL DIRECTIONS.
2. REFER TO SHEET C-3 FOR PROPOSED SITE PLAN.
3. LOWER SIDE OF MARKING SHOULD BE ALIGNED WITH THE END OF THE PARKING SPACE.
4. THE CENTER OF THE TEXT SHALL BE A MAXIMUM OF 6 INCHES FROM THE CENTERLINE OF THE VEHICLE SPACE.

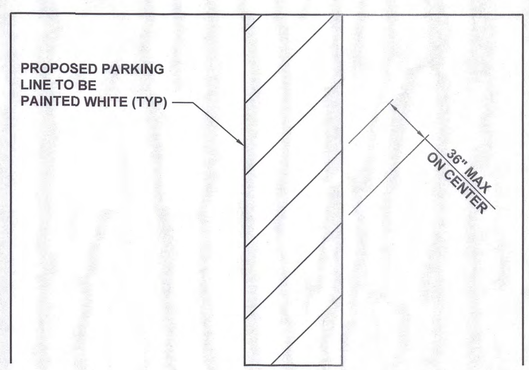

E / D-2 EVCS ACCESSIBLE STALL MARKING PLAN

SCALE: N.T.S.

NOTES

1. CONTRACTOR TO SELECT APPROPRIATE SIGN PER PROPOSED SIGN LOCATION.
2. BOTTOM OF LOWEST SIGN SHALL BE INSTALLED 66" ABOVE GRADE.

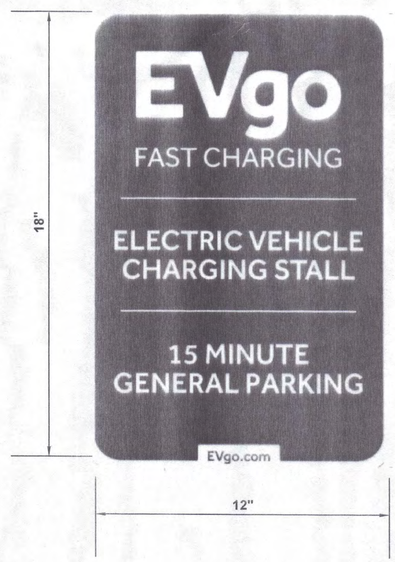

F / D-2 EV CHARGING GENERAL PARKING SIGN

SCALE: N.T.S.

EVgo FAST CHARGING

EVgo SERVICES, LLC
11835 W OLYMPIC BLVD STE 900 E
LOS ANGELES, CA 90064

WB Engineers+ Consultants

EV strategies

Job Name:

WAWA #0157
NORTH WALES

593 DEKALB PIKE, -EV
NORTH WALES,PA 19454

SHEET DESCRIPTION:
DETAILS

Project #: P17773
File:
Drawn by: KC
Date(s): 07/25/2022
2022.07.25 – DD100 PRELIMINARY DESIGN
2022.08.08 – ISSUED FOR PERMIT

D-2

A D-3 NOT USED

SCALE: N.T.S.

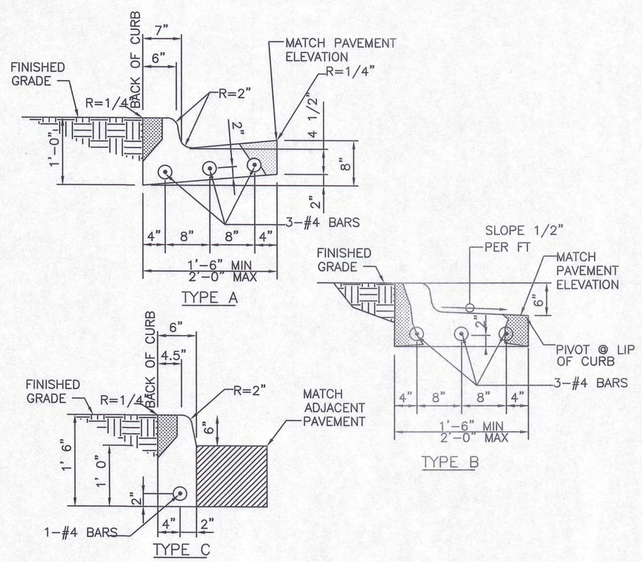

NOTE

1. 1/2" PRE MOLDED EXPANSION JOINTS SHALL BE PLACED AT POINTS OF CURVATURE, CURB RETURNS, CURB INLETS, AND AT 250' CENTERS. CONTRACTION JOINTS SHALL BE 2" DEEP, 3/16" WIDE, AND PLACED AT 15' INTERVALS EQUALLY SPACED BETWEEN EXPANSION JOINTS.

B D-3 CONCRETE CURB DETAIL

SCALE: N.T.S.

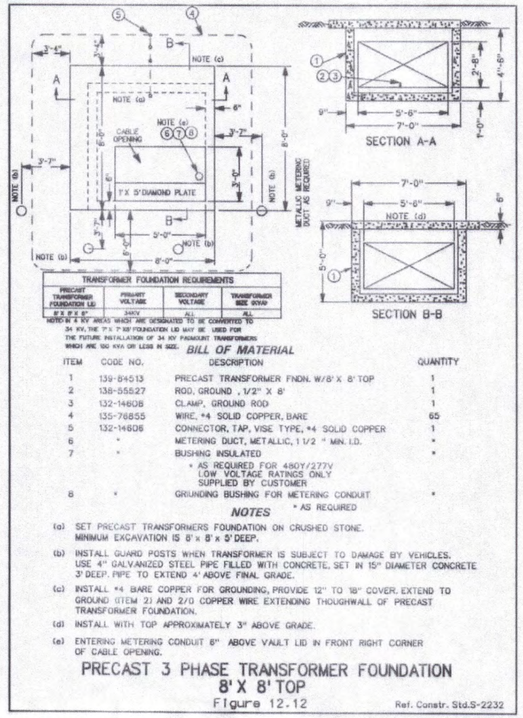

C D-3 TRANSFORMER FOUNDATION DETAIL

SCALE: N.T.S.

NOTES

1. CONTRACTOR TO SELECT CONCRETE FOOTING OR BOLT DOWN BASED ON EXISTING CONDITIONS.
2. SEE SHEET C-3 FOR PLACEMENT.
3. BOTTOM OF LOWEST SIGN TO BE INSTALLED 66" ABOVE GRADE.
4. ADDITIONAL PARKING SIGNS TO BE INSTALLED 2" ABOVE TOP OF PREVIOUS SIGN.
5. SIGN, SIGN POST, AND SIGN FASTENERS TO BE PROVIDED BY CONTRACTOR. CONTRACTOR TO PROVIDE SIGN POST FASTENERS IF REQUIRED AND PAINTED TO MATCH.
6. IF PAINT FINISH IS DAMAGED DURING INSTALLATION, CONTRACTOR SHALL REPAINT AS REQUIRED.
7. CONTRACTOR SHALL COORDINATE WITH CITY WHEN SPECIAL JURISDICTIONAL/CITY REQUESTS ARE NECESSARY FOR ANY SIGN POST INSTALLATION, I.E. POST MATERIAL, PAINT COLORS, HARDWARE, ETC. CONTRACTOR IS RESPONSIBLE FOR ENSURING CITY APPROVES ALL MATERIALS PRIOR TO INSTALLATION.

BOLT DOWN BASE PLATE NOTES

1. CONTRACTOR TO PROVIDE AND INSTALL SIGN POST, BASE PLATE ASSEMBLY, EXPANSION ANCHORS, AND 1/2" DIA A307 BOLT.
2. BASE PLATE ASSEMBLY TO BE HOT DIPPED GALVANIZED. PAINT TO MATCH SIGN POST.
3. PROVIDE 1/4" DIA. DRAIN HOLE TO PREVENT WATER FROM COLLECTING IN HSS.

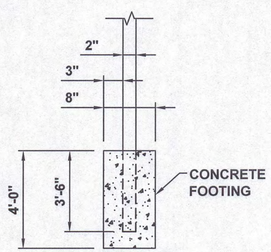

BEHIND CURB

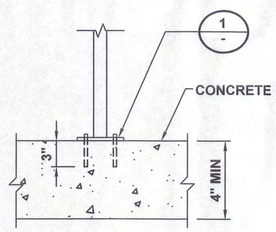

NEW OR EXISTING SIDEWALK

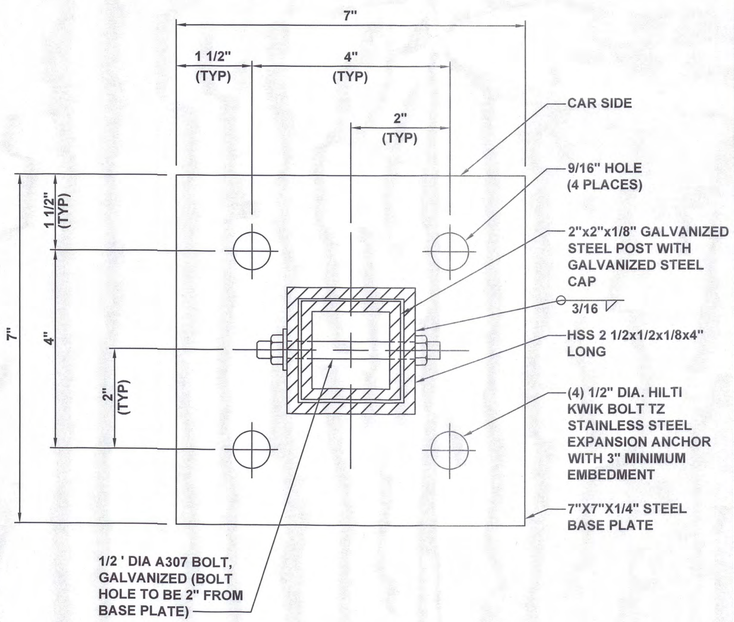

BASE PLATE DETAIL
-DETAIL 1

D D-3 SIGN POST INSTALLATION DETAIL

SCALE: N.T.S.

E D-3 NOT USED

SCALE: N.T.S.

EVgo
FAST CHARGING

EVgo SERVICES, LLC
11835 W OLYMPIC BLVD STE 900 E
LOS ANGELES, CA 90064

WB Engineers+ Consultants

EV strategies

Job Name:
WAWA #0157
NORTH WALES

593 DEKALB PIKE, -EV
NORTH WALES,PA 19454

SHEET DESCRIPTION:
DETAILS

Project #: P17773
File:
Drawn by: KC
Date(s): 07/25/2022
2022.07.25 – DD100 PRELIMINARY DESIGN
2022.08.08 – ISSUED FOR PERMIT

D-3

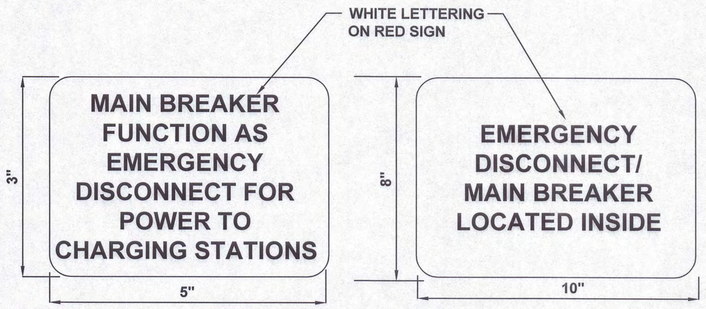

NOTE

1. TO BE PLACED BY THE MAIN BREAKER INSIDE SWITCHBOARD.

NOTE

1. TO BE PLACED ON OUTSIDE OF SWITCHBOARD SECTION HOUSING THE MAIN BREAKER.

A / D-4 EMERGENCY DISCONNECT SIGN DETAIL

SCALE: N.T.S.

NOTES

1. CONTRACTOR TO SELECT APPROPRIATE SIGN PER PROPOSED SIGN LOCATION.
2. BOTTOM OF LOWEST SIGN SHALL BE INSTALLED 68" ABOVE GRADE.

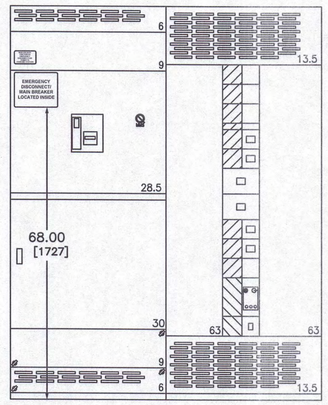

B / D-4 EMERGENCY DISCONNECT SIGN HEIGHT DETAIL

SCALE: N.T.S.

NOTES

1. LASER ENGRAVED PLAQUE. RED/WHITE, 0.5" ROUNDED CORNERS.
2. FURNISH AND INSTALL ON SWITCHBOARD WHERE IT IS VISIBLE.
3. BOTTOM OF LOWEST SIGN SHALL BE INSTALLED 68" ABOVE GRADE.

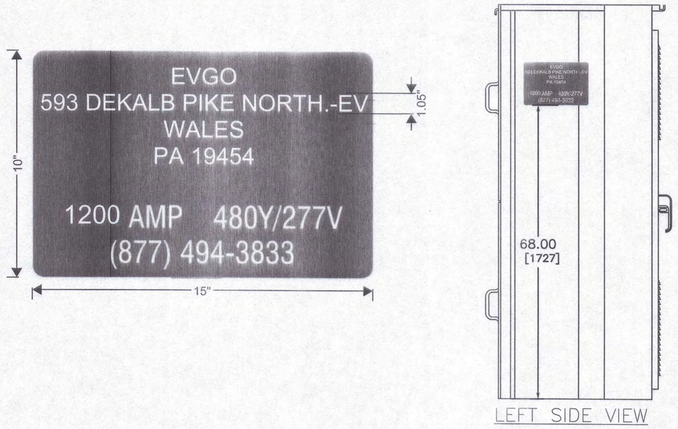

C / D-4 ADDRESS AND PLACARD DETAIL

SCALE: N.T.S.

D / D-4 NOT USED

SCALE: N.T.S.

E / D-4 NOT USED

SCALE: N.T.S.

EVgo
FAST CHARGING

EVgo SERVICES, LLC
11835 W OLYMPIC BLVD STE 900 E
LOS ANGELES, CA 90064

WB Engineers+ Consultants

EV strategies

Job Name:
WAWA #0157
NORTH WALES

593 DEKALB PIKE. -EV
NORTH WALES,PA 19454

SHEET DESCRIPTION:
DETAILS

Project #: P17773
File:
Drawn by: KC
Date(s): 07/25/2022
2022.07.25 – DD100 PRELIMINARY DESIGN
2022.08.08 – ISSUED FOR PERMIT

D-4

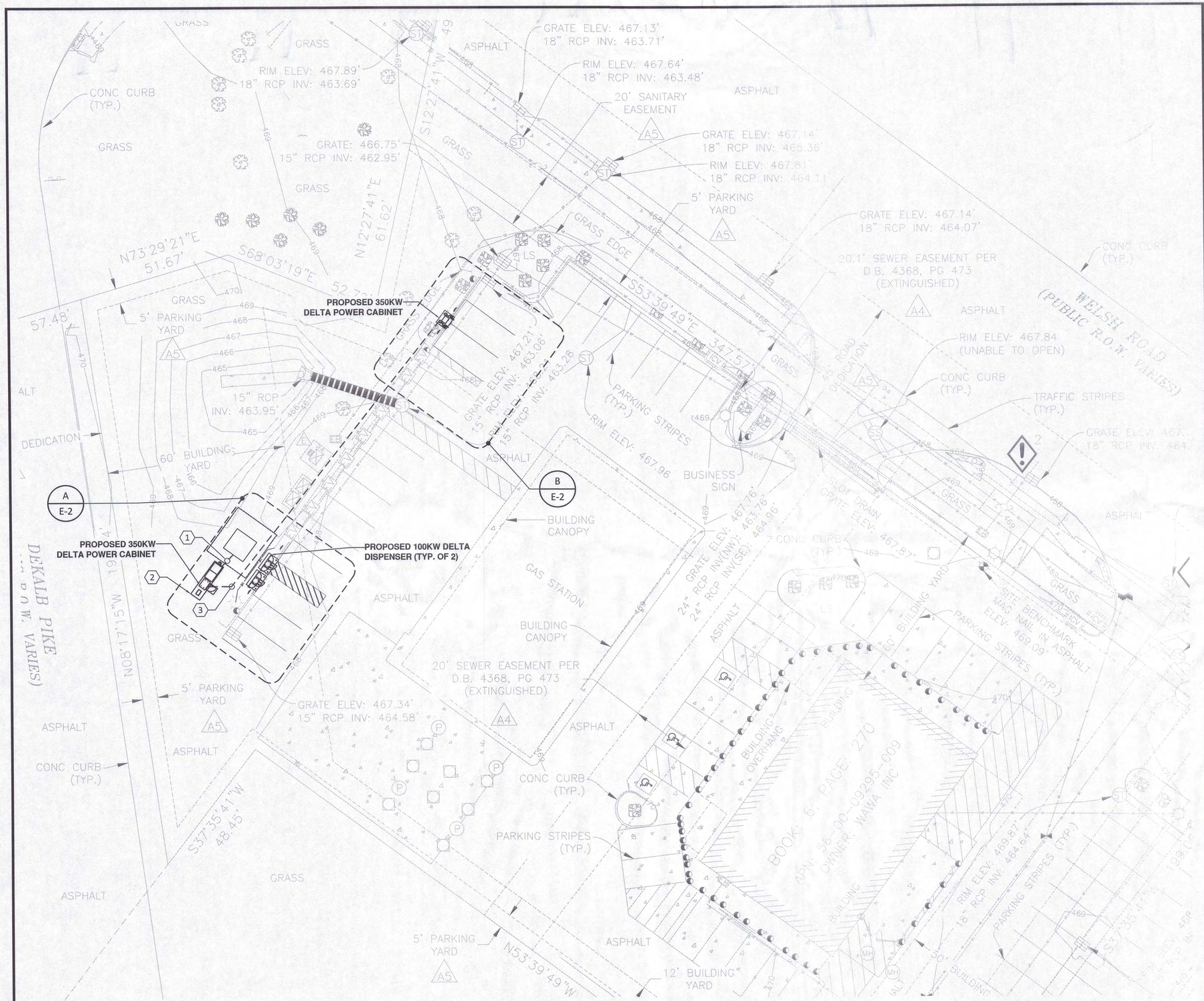

A E-1 **UTILITY PLAN**

SCALE: 1/16" = 1'-0"

GENERAL NOTES

1. THE UTILITY DESIGN DETAILS SUMMARIZED ON THIS SHEET ARE FOR PROPERTY OWNER REVIEW. THE CONTRACTOR SHALL REFERENCE THE UTILITY DESIGN PACKAGE (UDP), PROVIDED WITH THE ISSUED FOR CONSTRUCTION DRAWINGS FOR BIDDING. THE CONTRACTOR SHALL INSTALL THE UTILITY RELATED SCOPE OF WORK PER UTILITY CONSTRUCTION SPECIFICATION REQUIREMENTS.
2. UTILITY EQUIPMENT INSTALLATIONS AND PREP WORK AND TERMINATION OF SERVICE CONDUCTORS SHALL BE COORDINATED WITH THE APPROPRIATE UTILITY ENGINEER AT TIME OF PRE-CONSTRUCTION MEETING TO ENSURE ACCURACY OF INSTALLATIONS.
3. FOR GENERAL NOTES AND SYMBOL LIST, SEE E-7.
4. BEFORE BID SUBMISSION AND COMMENCING WORK, CONTRACTOR SHALL FIELD INSPECT SCOPE OF PROJECT, AND SUBMIT A REQUEST OF INFORMATION TO THE ENGINEER FOR ANY DISCREPANCIES OR INCOMPATIBILITIES FOUND BETWEEN DESIGN AND ACTUAL CONDITIONS.
5. ALL JUNCTION OR OUTLET BOXES SHALL BE INSTALLED SO AS TO ALLOW ACCESS TO COVER. PROVIDE APPROVED ACCESS DOORS OR PLATES AS REQUIRED IN AREAS WHERE UNOBSTRUCTED ACCESS TO BOX OR OUTLET IS NOT POSSIBLE.
6. EQUIPMENT LOCATIONS, WHERE SHOWN, ARE APPROXIMATE. FIELD VERIFY AND COORDINATE WITH OWNER, INCLUDING OTHER CONSTRUCTION RELATED INFORMATION.
7. ALL WORK TO BE PERFORMED AS PER LATEST LOCAL AHJ APPROVED EDITION OF NEC, AND LATEST LOCAL UTILITY SPECIFICATIONS.

KEYNOTES

1. PROVIDE (3) 4" PVC CONDUIT FROM UTILITY TRANSFORMER SECONDARY (WITH BUILT-IN C/T UTILITY COMPARTMENT) TO SWITCHBOARD & ADJACENT METER CAN. THE CONTRACTOR TO COORDINATE WITH UTILITY FOR FINAL LOCATIONS, QUANTITY CONDUITS AND ADDITIONAL REQUIREMENTS.
2. PROPOSED SERVICE ELECTRICAL INFRASTRUCTURE. REFER TO POWER RISER FOR ADDITIONAL INFORMATION.
3. PROVIDE CONDUIT(S) FROM SWITCHBOARD TO 350KW POWER UNIT TO 350KW DISPENSER AS REQUIRED. REFER TO DRAWING E-3 FOR ADDITIONAL INFORMATION.

EVgo FAST CHARGING

EVgo SERVICES, LLC
11835 W OLYMPIC BLVD STE 900 E
LOS ANGELES, CA 90064

WB Engineers+ Consultants

EVstrategies

Job Name:
WAWA #0157
NORTH WALES

593 DEKALB PIKE. -EV
NORTH WALES,PA 19454

SHEET DESCRIPTION:
ELECTRICAL UTILITY PLAN

Project #: P17773
File:
Drawn by: KC
Date(s): 07/25/2022
2022.07.25 – DD100 PRELIMINARY DESIGN
2022.08.08 – ISSUED FOR PERMIT

E-1

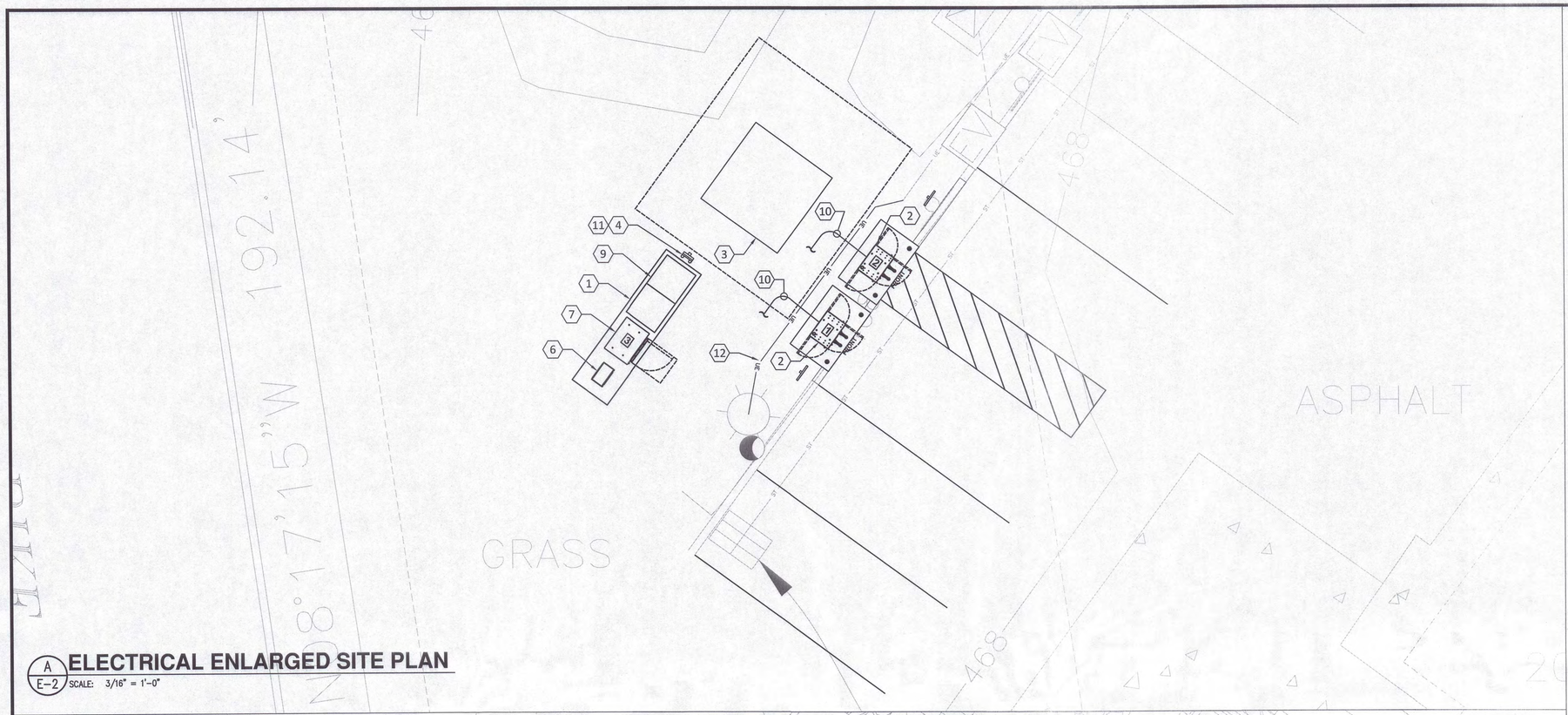

A E-2 **ELECTRICAL ENLARGED SITE PLAN**
SCALE: 3/16" = 1'-0"

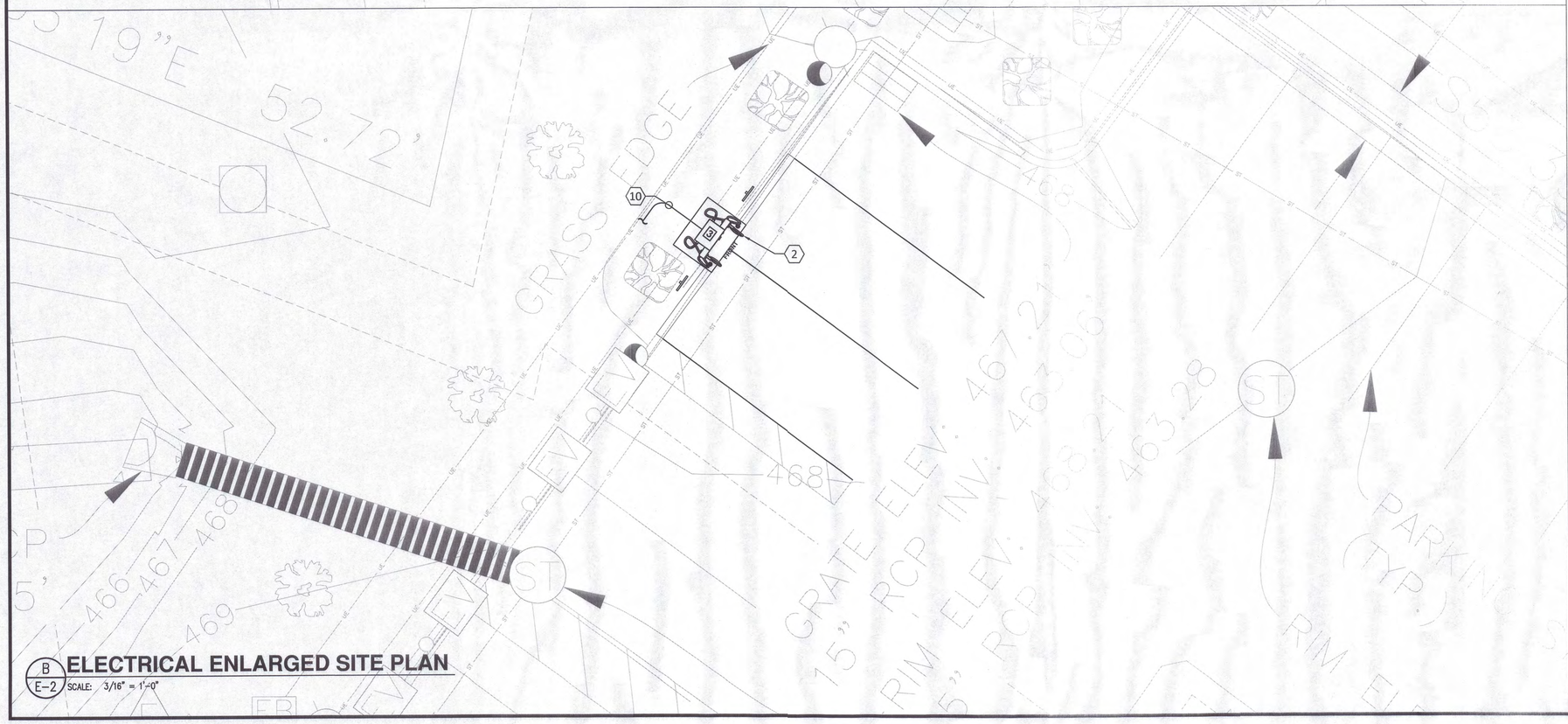

B E-2 **ELECTRICAL ENLARGED SITE PLAN**
SCALE: 3/16" = 1'-0"

DISPENSERS TABLE

PROPOSED DISPENSERS

CHARGE POST NO.	100 KW		350 KW		CABLE TYPE
1	1		-		CHAdeMO /CCS
2	1		-		CHAdeMO /CCS
3	-		1		CCS /CCS
-	-		-		

DISPENSER & POWER CABINET LENGTH

DISP. & POWER CABINET COMBO NO.	EST. LINEAR LENGTH SWBD TO DISP. & POWER CABINET	POWER CABINET NO.	EST. LINEAR LENGTH SWBD TO POWER CABINET	**EST. LENGTH (FT)	
1	12			28	
2	16			32	
		3	5	21	
TOTAL ESTIMATED LENGTH				81	
TOTAL ESTIMATED LENGTH OF WIRE				324	

TOTAL LENGTH OF AC WIRE = SUM OF ESTIMATED LENGTH X 4 WIRES PER POWER UINT

TOTAL LENGTH GROUND WIRE = SUM OF ESTIMATED LENGTH

DC CHARGING POST LENGTH

POWER CABINET	DISPENSER	EST. LINEAR LENGTH (FT)	**EST. LENGTH (FT)		
3	3	115	137		

NOTES

(SEE SHEET E-3 FOR WIRE CONFIGURATION)

** AC CONDUCTOR: 16 FEET IS ADDED TO HORIZONTAL RUN LENGTH TO ACCOUNT FOR BURIED DEPTH
*** DC CONDUCTORS: 22 FEET IS ADDED TO HORIZONTAL RUN LENGTH TO ACCOUNT FOR BURIED DEPTH

1. CONDUIT ROUTING IS DIAGRAMMATICALLY SHOWN ON PLANS AND ARE ONLY APPROXIMATIONS. THE EXACT LOCATION AND ROUTING PATHS SHALL BE FIELD VERIFIED AND INSTALLED PER JURISDICTIONAL REQUIREMENTS.
2. ALL ELECTRICAL WORK AND RELATED ACTIVITIES PERFORMED ONSITE SHALL BE DONE IN ACCORDANCE WITH NATIONAL ELECTRICAL CODE (NEC) STANDARDS BEING ENFORCED BY ALL APPLICABLE JURISDICTIONAL REQUIREMENTS AT TIME OF CONSTRUCTION.
3. UTILITY EQUIPMENT INSTALLATIONS AND PREP WORK SHALL BE COORDINATED WITH THE APPROPRIATE UTILITY ENGINEER TO ENSURE ACCURACY OF INSTALLATIONS.

KEY NOTES (#)

1. PROPOSED LOCATION OF NEW CONCRETE PAD.
2. PROPOSED DISPENSER (OFCI).
3. PROPOSED LOCATION FOR UTILITY TRANSFORMER.
4. PROPOSED LOCATION OF UTILITY METER (IF METER SOCKET NOT BUILT-IN SWITCHBOARD). COORDINATE FINAL LOCATION, SPEC AND OTHER REQUIREMENTS WITH UTILITY COMPANY PRIOR INSTALLATION OF METER.
5. NOT USED.
6. PROPOSED 120/208V, 3PH, 4W PANEL & 480V-120/208V 3PH TRANSFORMER COMBO (OFCI).
7. PROPOSED POWER CABINET (OFCI).
8. NOT USED
9. PROPOSED SWITCHGEAR ASSEMBLY (OWNER FURNISHED-CONTRACTOR-INSTALLED). COORDINATE IN FIELD FOR EXACT LOCATION AND DIMENSION AS REQUIRED.
10. PROVIDE CONDUIT(S) AND WIRING PER POWER RISER. REFER TO DRAWING E-3 FOR ADDITIONAL INFORMATION.
11. MOUNT THE C/T CABINET (IF UTILITY COMPARTMENT NOT BUILT-IN SWITCHBOARD) AND METER (IF METER SOCKET NOT BUILT-IN SWITCHBOARD) ON METAL SUPPORT CHANNELS AND THE HEIGHT REQUIREMENTS PER UTILITY STANDARD/NEC.
12. RELOCATE EXISTING UNDERGROUND ELECTRICAL CONDUIT AND ASSOCIATED WIRING. SPLICE AND EXTEND CIRCUITRY (CONDUIT/WIRING) FROM EXISTING LOCATION TO NEW LOCATION AS SHOWN ON DRAWING AS REQUIRED. REFER TO DRAWING C-3 FOR ADDITIONAL INFORMATION.

EVgo FAST CHARGING

EVgo SERVICES, LLC
11835 W OLYMPIC BLVD STE 900 E
LOS ANGELES, CA 90064

WB Engineers+ Consultants

EV strategies

Job Name:
WAWA #0157
NORTH WALES

593 DEKALB PIKE. -EV
NORTH WALES,PA 19454

SHEET DESCRIPTION:
ELECTRICAL
ENLARGED SITE PLAN

COMMONWEALTH OF PENNSYLVANIA REGISTERED PROFESSIONAL ENGINEER

Project #: P17773
File:
Drawn by: KC
Date(s): 07/25/2022
2022.07.25 – DD100 PRELIMINARY DESIGN
2022.08.08 – ISSUED FOR PERMIT

E-2

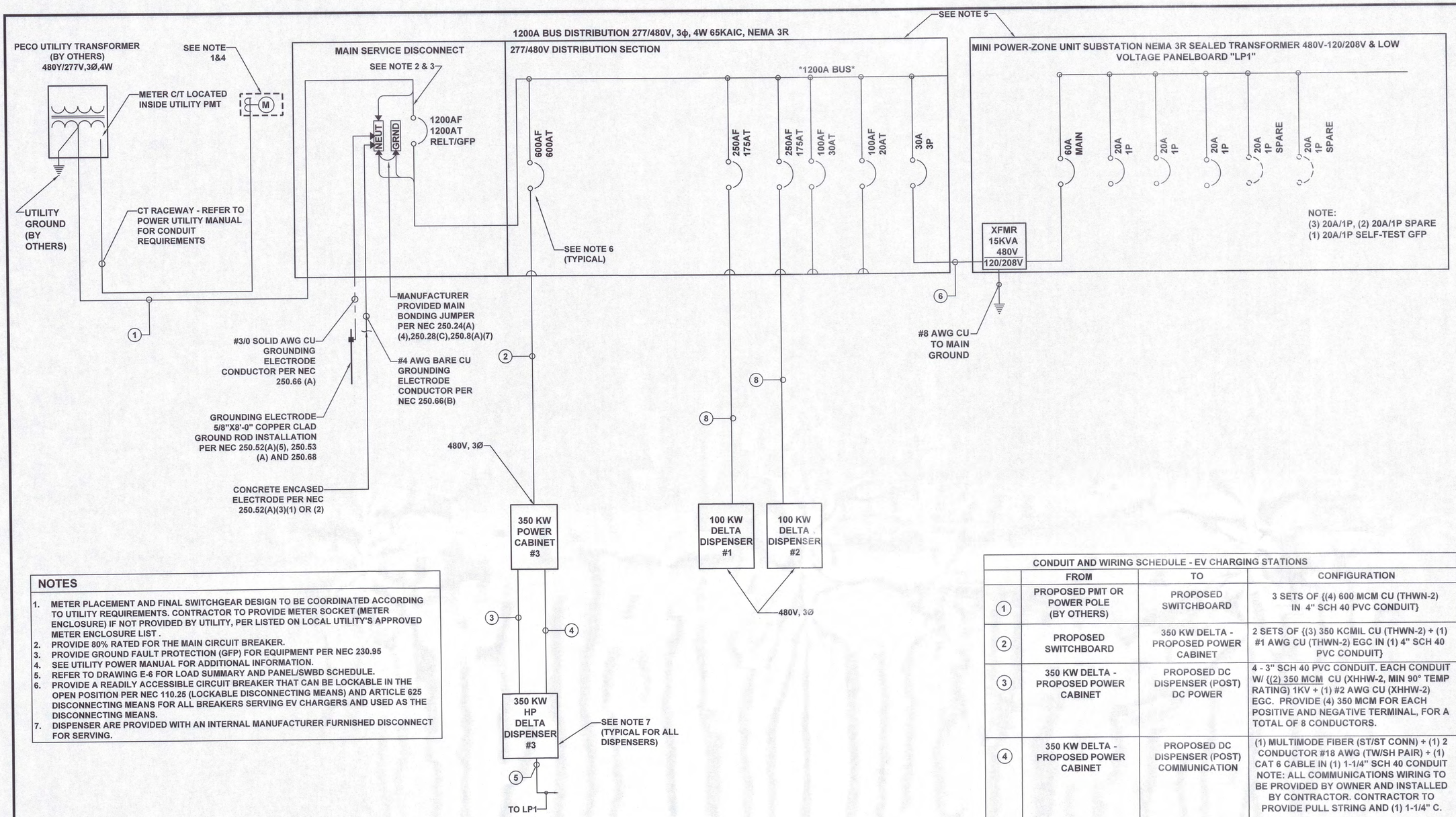

A
E-3
SINGLE LINE DIAGRAM
SCALE: N.T.S.

NOTES

1. METER PLACEMENT AND FINAL SWITCHGEAR DESIGN TO BE COORDINATED ACCORDING TO UTILITY REQUIREMENTS. CONTRACTOR TO PROVIDE METER SOCKET (METER ENCLOSURE) IF NOT PROVIDED BY UTILITY, PER LISTED ON LOCAL UTILITY'S APPROVED METER ENCLOSURE LIST .
2. PROVIDE 80% RATED FOR THE MAIN CIRCUIT BREAKER.
3. PROVIDE GROUND FAULT PROTECTION (GFP) FOR EQUIPMENT PER NEC 230.95
4. SEE UTILITY POWER MANUAL FOR ADDITIONAL INFORMATION.
5. REFER TO DRAWING E-6 FOR LOAD SUMMARY AND PANEL/SWBD SCHEDULE.
6. PROVIDE A READILY ACCESSIBLE CIRCUIT BREAKER THAT CAN BE LOCKABLE IN THE OPEN POSITION PER NEC 110.25 (LOCKABLE DISCONNECTING MEANS) AND ARTICLE 625 DISCONNECTING MEANS FOR ALL BREAKERS SERVING EV CHARGERS AND USED AS THE DISCONNECTING MEANS.
7. DISPENSER ARE PROVIDED WITH AN INTERNAL MANUFACTURER FURNISHED DISCONNECT FOR SERVING.

CONDUIT AND WIRING SCHEDULE - EV CHARGING STATIONS

	FROM	TO	CONFIGURATION
1	PROPOSED PMT OR POWER POLE (BY OTHERS)	PROPOSED SWITCHBOARD	3 SETS OF {(4) 600 MCM CU (THWN-2) IN 4" SCH 40 PVC CONDUIT}
2	PROPOSED SWITCHBOARD	350 KW DELTA - PROPOSED POWER CABINET	2 SETS OF {(3) 350 KCMIL CU (THWN-2) + (1) #1 AWG CU (THWN-2) EGC IN (1) 4" SCH 40 PVC CONDUIT}
3	350 KW DELTA - PROPOSED POWER CABINET	PROPOSED DC DISPENSER (POST) DC POWER	4 - 3" SCH 40 PVC CONDUIT. EACH CONDUIT W/ {(2) 350 MCM CU (XHHW-2, MIN 90° TEMP RATING) 1KV + (1) #2 AWG CU (XHHW-2) EGC. PROVIDE (4) 350 MCM FOR EACH POSITIVE AND NEGATIVE TERMINAL, FOR A TOTAL OF 8 CONDUCTORS.
4	350 KW DELTA - PROPOSED POWER CABINET	PROPOSED DC DISPENSER (POST) COMMUNICATION	(1) MULTIMODE FIBER (ST/ST CONN) + (1) 2 CONDUCTOR #18 AWG (TW/SH PAIR) + (1) CAT 6 CABLE IN (1) 1-1/4" SCH 40 CONDUIT NOTE: ALL COMMUNICATIONS WIRING TO BE PROVIDED BY OWNER AND INSTALLED BY CONTRACTOR. CONTRACTOR TO PROVIDE PULL STRING AND (1) 1-1/4" C.
5	PROPOSED PANELBOARD 120/208V SECTION	PROPOSED DC DISPENSER (POST) AUXILIARY POWER	(1) #10 AWG CU (THWN-2) + (1) #10 AWG CU (THWN-2) NEUT + (1) #10 AWG CU (THWN-2) EGC IN (1) 3/4" SCH 40 PVC CONDUIT
6	PROPOSED SWITCHBOARD	PROPOSED TRANSFORMER / PANEL 480V - 120/208V	(3) #8 AWG CU (THWN-2) + (1) #10 AWG CU (THWN-2) EGC IN (1) 1" GRC CONDUIT
7	NOT USED		
8	PROPOSED SWITCHBOARD	100 KW DELTA PROPOSED DISPENSER	(4) 3/0 KCMIL CU (THWN-2) + (1) #6 AWG CU (THWN-2) EGC IN (1) 3" SCH 40 PVC CONDUIT

PENDING UTILITY DESIGN. ENGINEER OF RECORD TO CONFIRM UTILITY FAULT CURRENT AND MEANS OF MITIGATION

EVgo FAST CHARGING

EVgo SERVICES, LLC
11835 W OLYMPIC BLVD STE 900 E
LOS ANGELES, CA 90064

WB Engineers+ Consultants

EV Strategies

Job Name:
WAWA #0157
NORTH WALES

593 DEKALB PIKE. -EV
NORTH WALES,PA 19454

SHEET DESCRIPTION:
ELECTRICAL
SINGLE LINE DIAGRAM

Project #: P17773
File:
Drawn by: KC
Date(s): 07/25/2022
2022.07.25 – DD100 PRELIMINARY DESIGN
2022.08.08 – ISSUED FOR PERMIT

E-3

NOTES

1. CONDUITS SHALL BE BURIED BELOW FROST LINE AND IN COMPLIANCE WITH LOCAL AND NATIONAL CODE REQUIREMENTS.
2. REFER TO CONDUIT AND WIRE SCHEDULE ON E-3 FOR CONDUIT AND WIRE REQUIREMENTS.
3. INSTALL DOTTIE DUCT SEAL COMPOUND PC 6130 (CAT NO. LHD1) (TYP FOR ALL CONDUITS FOR CHARGER CABINETS AND DISPENSERS).
4. REFER TO SHEET E-2 FOR CONDUIT STUB LOCATION.

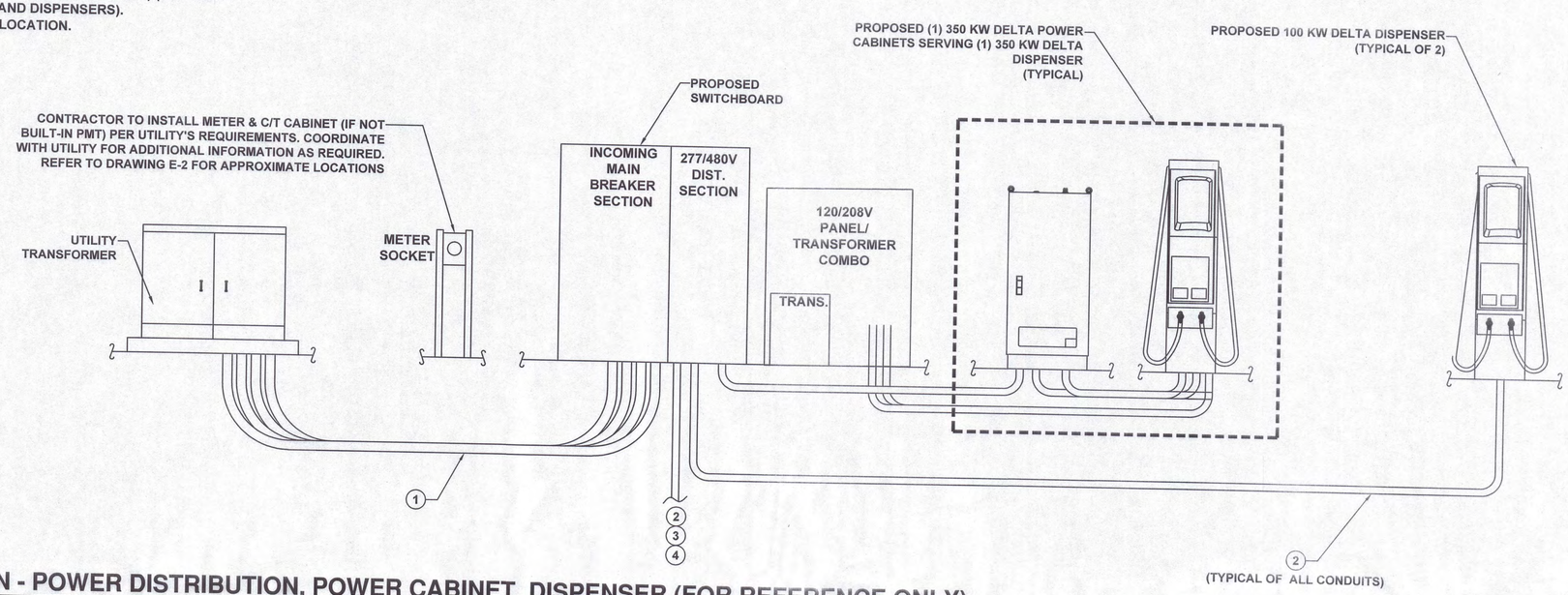

A E-4 **CONDUIT ELEVATION - POWER DISTRIBUTION, POWER CABINET, DISPENSER (FOR REFERENCE ONLY)**
SCALE: N.T.S.

PENDING UTILITY DESIGN

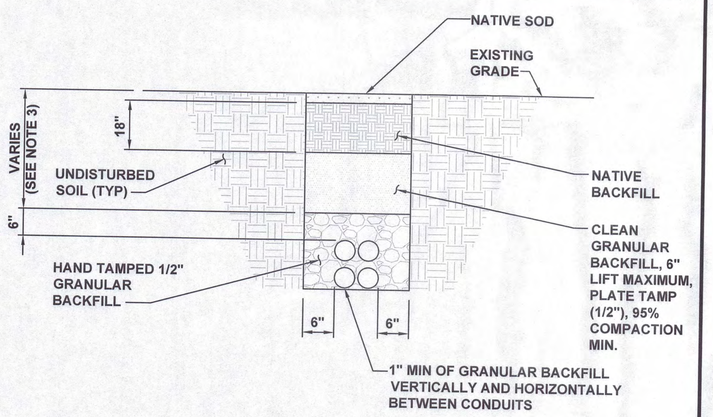

NOTES

1. ANY EXCAVATION LEFT OPEN NEEDS TO BE FENCED, BARRICADED, OR TRENCH PLATED TO INSURE THE SAFETY OF THE GENERAL PUBLIC.
2. ANY PAVEMENT DAMAGE DURING CONSTRUCTION SHALL BE REPAIRED OR REPLACED BY THE CONTRACTOR TO PRE CONSTRUCTION CONDITIONS OR BETTER.
3. TRENCH DEPTHS ARE REQUIRED TO BE 2'-0" MIN. OR 6" BELOW FROST LINE PER LOCAL JURISDICTION REQUIREMENTS.
4. EXACT NUMBER OF CONDUITS SHALL BE DETERMINED BY SHEET E-1 & E-2, EXACT CONDUIT PLACEMENT IN TRENCH SHALL BE DETERMINED BY THE CONTRACTOR IN THE FIELD BASED ON PHYSICAL MEASUREMENTS AND JURISDICTIONAL REQUIREMENTS.

B E-4 **TYPICAL NON-UTILITY CONDUIT UNDER SOIL TRENCH**
SCALE: N.T.S.

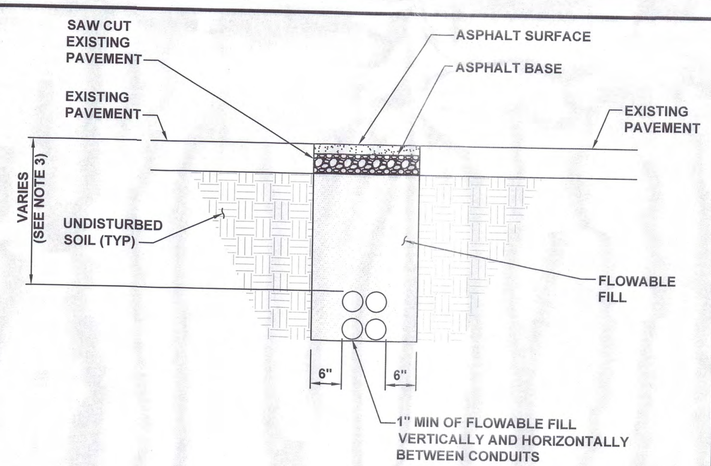

NOTES

1. ASPHALT SHALL COMPLY WITH STANDARD DOT OR LOCAL JURISDICTION SPEC. FOR HMA SURFACE COURSE.
2. ANY EXCAVATION LEFT OPEN NEEDS TO BE FENCED, BARRICADED, OR TRENCH PLATED TO INSURE THE SAFETY OF THE GENERAL PUBLIC.
3. TRENCH DEPTHS ARE REQUIRED TO BE 2'-0" MIN. OR 6" BELOW FROST LINE PER LOCAL JURISDICTION REQUIREMENTS.
4. ANY PAVEMENT DAMAGE DURING CONSTRUCTION SHALL BE REPAIRED OR REPLACED BY THE CONTRACTOR TO PRE CONSTRUCTION CONDITIONS OR BETTER.
5. EXACT NUMBER OF CONDUITS SHALL BE DETERMINED BY SHEET E-1 & E-2, EXACT CONDUIT PLACEMENT IN TRENCH SHALL BE DETERMINED BY THE CONTRACTOR IN THE FIELD BASED ON PHYSICAL MEASUREMENTS AND JURISDICTIONAL REQUIREMENTS.

C E-4 **TYPICAL NON-UTILITY CONDUIT UNDER ASPHALT TRENCH**
SCALE: N.T.S.

D E-4 **DETAIL NOT USED**
SCALE:

EVgo FAST CHARGING

EVgo SERVICES, LLC
11835 W OLYMPIC BLVD STE 900 E
LOS ANGELES, CA 90064

WB Engineers+ Consultants

EVstrategies

Job Name:
WAWA #0157
NORTH WALES

593 DEKALB PIKE. -EV
NORTH WALES,PA 19454

SHEET DESCRIPTION:
ELECTRICAL DETAILS

Project #: P17773
File:
Drawn by: KC
Date(s): 07/25/2022
2022.07.25 – DD100 PRELIMINARY DESIGN
2022.08.08 – ISSUED FOR PERMIT

E-4

ELECTRICAL SPECIFICATIONS

260500 - GENERAL REQUIREMENTS

A. ALL WORK SHALL COMPLY WITH REQUIREMENTS OF THE NATIONAL ELECTRICAL CODE, LOCAL BUILDING CODE AND BUILDING MANAGEMENT RULES AND REGULATIONS. CONTRACTOR IS TO INFORM ENGINEER OF ANY EXISTING WORK OR MATERIALS THAT VIOLATE ANY OF THE ABOVE LAWS AND REGULATIONS. ANY WORK DONE BY THE CONTRACTOR CAUSING SUCH VIOLATION SHALL BE CORRECTED AT CONTRACTOR'S EXPENSE BY THIS CONTRACTOR AND AT NO EXPENSE TO THE OWNER.

B. ALL WORK SHALL BE PERFORMED IN ACCORDANCE WITH THE EXISTING BUILDING CONSTRUCTION STANDARDS.

C. PRIOR TO SUBMISSION OF BID, THIS CONTRACTOR SHALL VISIT THE JOB SITE TO ASCERTAIN THE ACTUAL FIELD CONDITIONS AS THEY RELATE TO THE WORK AS INDICATED ON THE DRAWINGS AND DESCRIBED HEREIN. DISCREPANCIES IF ANY, SHALL BE BROUGHT TO THE ENGINEER'S ATTENTION PRIOR TO SUBMISSION OF HIS BID, AND IF NOT RESOLVED TO SATISFACTION SHALL BE SUBMITTED AS A WRITTEN QUALIFICATION OF THE BID. SUBMISSION OF A BID SHALL BE EVIDENCE THAT SITE VERIFICATION HAS BEEN PERFORMED AS DESCRIBED ABOVE. REQUEST FOR ADDITIONAL COMPENSATION DUE TO CONTRACTOR'S FAILURE TO EXAMINE THE SITE PRIOR TO SUBMISSION OF BID SHALL NOT BE CONSIDERED.

D. DRAWINGS ARE DIAGRAMMATIC AND INDICATE GENERAL ARRANGEMENT OF WORK AND APPROXIMATE LOCATION OF EQUIPMENT. IF A CONFLICT OCCURS IN THE SPECIFICATIONS AND/OR ON THE DRAWINGS, THE MORE STRINGENT SITUATION SHALL APPLY.

E. PRIOR TO SUBMISSION OF BID, THIS CONTRACTOR SHALL REVIEW ALL DRAWINGS OF THE ENTIRE PROJECT INCLUDING GENERAL CONSTRUCTION, DEMOLITION, ARCHITECTURAL, MECHANICAL, ELECTRICAL, AND PLUMBING, AND SHALL INCLUDE ANY WORK REQUIRED IN THE BID THAT IS INDICATED OR IMPLIED TO BE PERFORMED BY THIS TRADE IN OTHER SECTIONS OF THE WORK.

F. ANY EQUIPMENT, PARTS, MATERIALS, ACCESSORIES, OR LABOR THAT IS NECESSARY FOR PROPER PERFORMANCE OF THE ELECTRICAL WORK, ALTHOUGH NOT SPECIFICALLY MENTIONED HEREIN, OR SHOWN ON THE DRAWINGS, SHALL BE FURNISHED AND INSTALLED AS IF CALLED FOR IN DETAIL WITHOUT ADDITIONAL COST.

G. ALL MATERIALS AND WORKMANSHIP SHALL BE GUARANTEED FOR A PERIOD OF ONE YEAR FROM DATE OF FINAL ACCEPTANCE OF THIS WORK. FINAL ACCEPTANCE SHALL BE DEFINED AS THE TIME THAT THE ELECTRICAL WORK IS TAKEN OVER AND ACCEPTED BY THE OWNER, AND IS UNDER CARE, CUSTODY, AND CONTROL OF THE OWNER. ENGAGE THE SERVICES OF VARIOUS MANUFACTURERS SUPPLYING THE EQUIPMENT FOR THE PROPER STARTUP AND OPERATION AND SERVICING OF THE EQUIPMENT.

H. ALL MATERIALS SHALL BE NEW AND SHALL CONFORM TO THE STANDARDS OF THE UNDERWRITERS' LABORATORIES INC. MATERIALS SHALL BE FABRICATED IN ACCORDANCE WITH THE SPECIFICATIONS AND APPROVED RULES AND REGULATIONS OF NEMA AND SHALL BEAR THE UL INSPECTION LABEL. MATERIAL AND APPARATUS FOR LIKE SHALL BE BY THE SAME MANUFACTURER.

I. PROVIDE ALL LABOR, MATERIALS, EQUIPMENT AND CONTRACTOR'S SERVICES NECESSARY FOR COMPLETE, SAFE INSTALLATION OF ALL ELECTRICAL WORK. THE SCOPE OF WORK SHALL INCLUDE, BUT NOT BE LIMITED TO THE FOLLOWING:

1. PROVIDING OF LIGHT FIXTURES AND LAMPS INCLUDING EXIT AND EMERGENCY LIGHTING AND ALL ASSOCIATED COMPONENTS AND BRANCH CIRCUITING.
2. PROVIDING OF NEW RACEWAY AND CONDUCTORS FOR LIGHTING AND POWER.
3. CUTTING, CHANNELING AND CHASING REQUIRED TO ACCOMMODATE THE ELECTRICAL INSTALLATION AND ROUGH PATCHING.
4. PROVIDING OF CONDUIT, JUNCTION BOXES, PULL BOXES, ETC., REQUIRED FOR THE AFOREMENTIONED EQUIPMENT.
5. GROUNDING OF ALL EQUIPMENT AS REQUIRED BY NATIONAL ELECTRICAL CODE AND AS SHOWN ON THE DRAWINGS.
6. PROVIDING RECEPTACLES, LIGHT SWITCHES, DISCONNECT SWITCHES, OUTLET BOXES, CONTACTORS AND OTHER WIRING DEVICES INCLUDING RELATED BRANCH CIRCUIT WIRING.
7. PROVIDING ENGRAVED LAMICOID NAMEPLATES FOR NEW PANELBOARDS, SWITCHES, CABINETS, MOTOR STARTERS, ETC.

J. FOLLOW THE GENERAL CONDITIONS OF THE CONTRACT FOR CONSTRUCTION AIA DOCUMENT A201 LATEST EDITION, OR AS REQUIRED BY THE ARCHITECTS DOCUMENTS AND/OR ENGINEERS DOCUMENTS.

K. SUBMIT SHOP DRAWINGS CERTIFIED BY ALL TRADES THAT COORDINATION HAS BEEN ESTABLISHED. SUBMIT ALL CERTIFIED EQUIPMENT CUTS WITH CONSTRUCTION WIRING DIAGRAMS. PROVIDE A MINIMUM OF SIX (6) COPIES OF 8-1/2"X11" SUBMISSIONS AND ONE (1) REPRODUCIBLE AND ONE (1) PRINT OF ALL DRAWINGS.

SUBMIT SHOP DRAWINGS FOR THE FOLLOWING ELECTRONICALLY TO SUBMITTALSDC@WBENGINEERING.COM, AS WELL AS THE WB PROJECT MANAGER:

1. SWITCHES AND FUSES.
2. OVERCURRENT PROTECTIVE DEVICE COORDINATION STUDY.
3. ARC FLASH HAZARD ANALYSIS STUDY.

L. CONTRACTOR SHALL REVISE DRAWINGS TO CONFORM TO RECORD DRAWINGS AND SUBMIT AS-BUILT CONDITION (DEVICES, EQUIPMENT, CIRCUITRY, ETC.), DRAWINGS UPON COMPLETION OF THE PROJECT. FINAL SUBMISSION OF REPRODUCIBLE AND ACAD DISKETTE OF AS-BUILT DRAWINGS ARE TO BE SUBMITTED TO THE OWNER AND WB ENGINEERS AND CONSULTANTS FOR REVIEW AND RECORDS.

M. SUBSTITUTE MATERIAL OR MANUFACTURER OF EQUIPMENT SHALL NOT BE PERMITTED WITHOUT A FORMAL WRITTEN SUBMITTAL TO THE ENGINEER THAT INCLUDES ALL DIMENSIONAL, PERFORMANCE AND MATERIAL SPECIFICATIONS. ANY CHANGES IN LAYOUT, ELECTRICAL CHARACTERISTICS, STRUCTURAL REQUIREMENTS, OR DESIGN DUE TO THE USE OF A SUBSTITUTION SHALL BE SUBMITTED TO THE ENGINEER AS PART OF THIS PROPOSAL. THE CONTRACTOR TAKES FULL RESPONSIBILITY FOR THE SUBSTITUTION AND ALL CHANGES RESULTING FROM SUBSTITUTION.

N. DEFINITIONS:

1. "ELECTRICAL CONTRACTOR", "THIS CONTRACTOR" - THE PARTY OR PARTIES HAVE BEEN DULY AWARDED THE CONTRACT FOR AND ARE THEREBY MADE RESPONSIBLE FOR THE ELECTRICAL WORK AS DESCRIBED HEREIN.
2. "ARCHITECT", "ENGINEER", "OWNER'S REPRESENTATIVE" - THE PARTY OR PARTIES RESPONSIBLE FOR INTERPRETING, ACCEPTING AND OTHERWISE RULING ON THE PERFORMANCE UNDER THIS CONTRACT.
3. "FURNISH" - PURCHASE AND DELIVER TO THE PROJECT SITE COMPLETE WITH EVERY NECESSARY APPURTENANCE AND SUPPORT, ALL AS PART OF THE ELECTRICAL WORK.
4. "INSTALL" - UNLOAD AT THE DELIVERY POINT AT THE SITE AND PERFORM EVERY OPERATION NECESSARY TO ESTABLISH SECURE MOUNTING INSTALLATION AND CORRECT OPERATION AT THE PROPER LOCATION IN THE PROJECT, ALL AS PART OF THE ELECTRICAL WORK.
5. "PROVIDE" - "FURNISH" AND "INSTALL"
6. "RELOCATE" - MOVE EXISTING EQUIPMENT/DEVICES/FIXTURE AND ALL ACCESSORIES AS REQUIRED, INCLUDING THE EXTENSION OF EXISTING OR PROVIDING NEW CIRCUIT/CONDUCTORS/WIRING AS REQUIRED.
7. "REMOVE" - DISMANTLE AND CART AWAY FROM SITE INCLUDING ALL RELATED ACCESSORIES. ALL OTHER EQUIPMENT AND OPERATIONS IN ANY WAY EFFECTED BY THE REMOVAL IS TO REMAIN IN FULL OPERATION. PROVIDE ALL NECESSARY COMPONENTS TO MAINTAIN SUCH OPERATION.

S. ACCEPTABLE MANUFACTURERS:
DISCONNECT SWITCHES: SIEMENS, GE OR SQUARE "D"
FUSES: BUSSMAN, GOULD SHAWMUTT
RACEWAY: NATIONAL WIRE PRODUCTS, TRIANGLE OR REPUBLIC
WIRE/CABLE: ROME PHELPS DOGGE, GENERAL CABLE, SIMPLEX
PANELBOARDS: SIEMENS, GE OR SQUARE "D".
JUNCTION/PULL BOXES: APPLETOWN ELECTRIC, CROUSE HINDS OR O.Z./ GEDNEY CO.
FIRE STOP MATERIAL: HILTI, 3M (NOTE: MATERIAL MUST BE ACCEPTABLE TO LOCAL AHJ)
FITTINGS, COUPLINGS, BUSHINGS, CONNECTORS: OZ GEDNEY, BURNDY, NEPCO, THOMAS AND BETTS

260519 - WIRE AND CABLE

A. ALL CONDUCTORS SHALL BE COPPER, TYPE THHN/THWN INSULATED. ALL CONDUCTORS SHALL HAVE 600 VOLT AC RATED 1,000 VOLT DC RATED INSULATION. CONDUCTORS #10 AWG AND SMALLER SHALL BE SOLID WIRE. CONDUCTORS AND #8 AWG AND LARGER SHALL BE STRANDED WIRE.

B. METAL CLAD CABLE (TYPE MC) IS NOT ALLOWED.

C. BRANCH CIRCUIT WIRE SIZE: THE MINIMUM WIRE SIZE FOR BRANCH CIRCUIT SHALL BE #12 AWG EXCEPT 120 VOLT CIRCUITS OVER 80 FEET IN LENGTH SHALL BE 10# AWG. REFER TO DRAWINGS FOR FURTHER WIRE SIZING INFORMATION.

D. PROVIDE ALL BRANCH CIRCUITS WITH DEDICATED GROUND WIRES.

G. PROVIDE FLAMEPROOF IDENTIFICATION TAGS IN ALL JUNCTION BOXES, PULL BOXES AND PANELBOARDS FOR ALL FEEDERS, BRANCH CIRCUIT AND CONTROL WIRING. TAGS SHALL IDENTIFY CONDUCTOR SIZES, SOURCE AND TERMINATION POINTS.

H. INSTALL NO MORE THAN 3 BRANCH CIRCUITS IN ONE CONDUIT OR HOMERUN UNLESS OTHERWISE NOTED.

260526 - GROUNDING AND BONDING OF ELECTRICAL SYSTEMS

A. SERVICE: PROVIDE COMPLETE SYSTEM OF GROUND CONDUCTORS, ELECTRODES, AND ACCESSORIES TO EFFECTIVELY AND PERMANENTLY GROUND ELECTRIC SERVICE.

B. EQUIPMENT: GROUND NON-CURRENT CARRYING METAL PARTS OF THE ELECTRICAL SYSTEM. PROVIDE A SEPARATE GREEN INSULATED EQUIPMENT GROUNDING CONDUCTOR WITH ALL FEEDERS AND BRANCH CIRCUITS, SIZED IN ACCORDANCE WITH THE OVER CURRENT PROTECTIVE DEVICE SERVING THAT FEEDER OR BRANCH CIRCUIT.

260533 - RACEWAY

A. CONDUIT FOR BRANCH CIRCUIT SHALL BE, WITH COMPRESSION FITTINGS SIZED PER DRAWING, 3/4" MINIMUM. (MAXIMUM 3 CIRCUITS PER HOMERUN EXCEPT AS NOTED).

B. FLEXIBLE STEEL CONDUIT MAY BE USED ONLY FOR:

1. SHORT CONNECTIONS WHERE RIGID CONDUIT IS IMPRACTICABLE.
2. FOR FINAL CONNECTION TO MOTOR TERMINAL BOX. TRANSFORMERS AND OTHER VIBRATING EQUIPMENT: WITH POLYVINYL SHEATHING AND GROUND CONDUCTOR. MINIMUM LENGTH 18 IN (457.2mm). WITH SLACK. CONNECT GROUND CONDUCTOR TO ENCLOSURE OR RACEWAY AT EACH END.
3. FOR EXPANSION JOINT CROSSINGS, CROSS AT RIGHT ANGLES AND ANCHOR ENDS.
4. CONNECT GROUND CONDUCTOR TO ENCLOSURE OR RACEWAY AT EACH END.

C. EXPANSION FITTINGS: INSTALL AT RIGHT ANGLES WITH CLIP CENTERED IN EXPANSION JOINT. PROVIDE LENGTH OF RUNS IN ACCORDANCE WITH MANUFACTURER'S RECOMMENDATIONS.

D. RACEWAYS PASSING THROUGH FIRE-RATED CONSTRUCTION: SEAL OPENING WITH FIRE SEALANT AS REQUIRED TO MAINTAIN THE EXISTING FIRE RATING.

E. PROVIDE FISH OR PULL WIRE IN ALL EMPTY CONDUITS OVER 10 FEET (3048mm) LONG.

F. MAINTAIN GROUND CONTINUITY OF ALL INTERRUPTED RACEWAYS WITH GROUND CONDUCTOR.

G. ALL WIRING WITHIN ELECTRICAL CLOSET AND IN BUILDINGS CORE CEILINGS SHALL BE INSTALLED IN CONDUIT.

H. INSTALL ACCESSIBLE JUNCTION AND PULLBOXES CLEAR OF OTHER TRADES AND SUPPORTED FROM BUILDING STRUCTURE INDEPENDENT OF CONDUIT.

I. OUTDOORS: APPLY RACEWAY PRODUCTS AS SPECIFIED BELOW UNLESS OTHERWISE INDICATED:
1. EXPOSED CONDUIT: GRC, RNC-TYPE EPC-40-PVC, RNC-TYPE EPC-80-PVC.
2. CONCEALED CONDUIT, ABOVEGROUND: GRC, EMT, RNC-TYPE EPC-40-PVC.
3. UNDERGROUND CONDUIT: RNC-TYPE EPC-40-PVC/TYPE EPC-80-PVC, DIRECT BURIED, CONCRETE ENCASED.

260534 - PULL BOXES, JUNCTION BOXES AND OUTLET BOXES

J. PULLBOXES, JUNCTION BOXES AND OUTLET BOXES SHALL BE MANUFACTURED FROM GALVANIZED INDUSTRY STANDARD GAUGE SHEET STEEL.

K. PROVIDE PULL BOXES AND JUNCTION BOXES IN LONG STRAIGHT RUNS OF RACEWAY TO ASSURE THAT CABLES ARE NOT DAMAGED WHEN THEY ARE PULLED, TO FULFILL REQUIREMENTS AS TO THE NUMBER OF BENDS PERMITTED IN RACEWAY BETWEEN CABLE ACCESS POINTS, THE ACCESSIBILITY OF CABLE JOINTS AND SPLICES, AND THE APPLICATION OF CABLE SUPPORTS.

L. PULLBOXES AND JUNCTION BOXES SHALL BE SIZED SO THAT THE MINIMUM BENDING RADIUS CRITERIA SPECIFIED FOR THE WIRES AND CABLE ARE MAINTAINED.

M. ALL EQUIPMENT, DEVICE BOXES, JUNCTION BOXES, PULLBOXES AND OUTLET BOXES SHALL BE INSTALLED SO AS TO ALLOW ACCESS TO THE BOX. IF NECESSARY AND APPROVED BY ARCHITECT, PROVIDE ACCESS DOOR OR COVERPLATES IN AREAS WHERE UNOBSTRUCTED ACCESS IS NOT POSSIBLE.

N. USE WEATHERPROOF BOXES, JUNCTION BOXES AND DEVICES FOR ALL REQUIRED WEATHERPROOF INSTALLATION.

EVgo
FAST CHARGING

EVgo SERVICES, LLC
11835 W OLYMPIC BLVD STE 900 E
LOS ANGELES, CA 90064

WB Engineers+ Consultants

EV strategies

Job Name:
WAWA #0157
NORTH WALES

593 DEKALB PIKE. -EV
NORTH WALES,PA 19454

SHEET DESCRIPTION:
ELECTRICAL SPECIFICATIONS

COMMONWEALTH OF PENNSYLVANIA
REGISTERED PROFESSIONAL ENGINEER

Project #: P17773
File:
Drawn by: KC
Date(s): 07/25/2022
2022.07.25 – DD100 PRELIMINARY DESIGN
2022.08.08 – ISSUED FOR PERMIT

E-5

ELECTRICAL SPECIFICATIONS

260573 - OVERCURRENT PROTECTIVE DEVICE COORDINATION STUDY

A. COMPUTER SOFTWARE DEVELOPERS. PROVIDE PRODUCTS BY ONE OF THE FOLLOWING:

1. SKM SYSTEMS ANALYSIS, INC.
2. ESA, INC.
3. CGI CYME.
4. EDSA MICRO CORPORATION.
5. OPERATION TECHNOLOGY, INC.

B. CALCULATE THE MAXIMUM AVAILABLE SHORT-CIRCUIT CURRENT IN AMPERES RMS SYMMETRICAL AT CIRCUIT BREAKER POSITIONS OF THE ELECTRICAL POWER DISTRIBUTION SYSTEM. THE CALCULATION SHALL BE FOR A CURRENT IMMEDIATELY AFTER INITIATION AND FOR A THREE-PHASE BOLTED SHORT CIRCUIT AT EACH OF THE FOLLOWING:

1. SWITCHGEAR AND SWITCHBOARD BUS.
2. BRANCH CIRCUIT PANELBOARD.

C. CALCULATIONS TO VERIFY INTERRUPTING RATINGS OF OVERCURRENT PROTECTIVE DEVICES SHALL COMPLY WITH IEEE 141.

D. PERFORM COORDINATION STUDY USING APPROVED COMPUTER SOFTWARE PROGRAM. PROVIDE A WRITTEN REPORT USING RESULTS OF FAULT-CURRENT STUDY. COMPLY WITH IEEE 399.

1. CALCULATE THE MAXIMUM AND MINIMUM 1/2-CYCLE SHORT-CIRCUIT CURRENTS.
2. CALCULATE THE MAXIMUM AND MINIMUM INTERRUPTING DUTY (5 CYCLES TO 2 SECONDS) SHORT-CIRCUIT CURRENTS.
3. CALCULATE THE MAXIMUM AND MINIMUM GROUND-FAULT CURRENTS.

E. COMPLY WITH IEEE 241 RECOMMENDATIONS FOR FAULT CURRENTS AND TIME INTERVALS.

F. TRANSFORMER PRIMARY OVERCURRENT PROTECTIVE DEVICES:

1. DEVICE SHALL NOT OPERATE IN RESPONSE TO THE FOLLOWING:
   - 1.a. INRUSH CURRENT WHEN FIRST ENERGIZED.
   - 1.b. SELF-COOLED, FULL-LOAD CURRENT OR FORCE-AIR-COOLED, FULL-LOAD CURRENT, WHICHEVER IS SPECIFIED FOR THAT TRANSFORMER.
   - 1.c. PERMISSIBLE TRANSFORMER OVERLOADS ACCORDING TO IEEE C57.96 IF REQUIRED BY UNUSUAL LOADING OR EMERGENCY CONDITIONS.
2. DEVICE SETTINGS SHALL PROTECT TRANSFORMERS ACCORDING TO IEEE C57.12.00, FOR FAULT CURRENTS.

G. CONDUCTOR PROTECTION: PROTECT CABLES AGAINST DAMAGE FROM FAULT CURRENTS ACCORDING TO ICEA P-32-382, ICEA P-45-482, AND CONDUCTOR MELTING CURVES IN IEEE 242.

260574 - ARC-FLASH HAZARD ANALYSIS STUDY

A. THE CONTRACTOR SHALL FURNISH AN ARC FLASH HAZRD ANALYSIS STUDY PER THE REQUIREMENTS SET FORTH IN NFPA 70E - STANDARD FOR SAFETY IN THE WORKPLACE. THE ARC FLASH HAZARD ANALYSIS SHALL BE PERFORMED ACCORDING TO IEEE 1584 EQUATIONS THAT ARE PRESENTED IN NFPA70E-2004, ANNEX.

B. THE FLASH PROTECTION BOUNDARY AND THE INCIDENT ENERGY SHALL BE CALCULATED AT ALL SIGNIFICANT LOCATIONS IN THE ELECTRICAL DISTRIBUTION SYSTEM (SWITCHBOARDS, PANELBOARDS, BUSWAY AND SPLITTERS) WHERE WORK COULD BE PERFORMED ON ENERGIZED PARTS.

C. SAFE WORKING DISTANCES SHALL BE BASED UPON THE CALCULATED ARC FLASH BOUNDARY CONSIDERING AN INCIDENT ENERGY OF 1.2 CAL/CM².

D. ARC FLASH CALCULATIONS SHALL BE BASED ON ACTUAL OVERCURRENT PROTECTIVE DEVICE CLEARING TIME. MAXIMUM CLEARING TIME WILL BE CAPPED AT 2 SECONDS BASED ON IEEE 1584-2002 SECTION B.1.2. WHERE IT IS NOT PHYSICALLY POSSIBLE TO MOVE OUTSIDE OF THE FLASH PROTECTION BOUNDARY IN LESS THAN 2 SECONDS DURING AN ARC FLASH EVENT A MAXIMUM CLEARING TIME BASED ON THE SPECIFIC LOCATION SHALL BE UTILIZED.

E. CONTRACTOR SHALL PROVIDE A 3.5" (91mm) x 5" (129mm) THERMAL TRANSFER TYPE LABEL OF HIGH ADHESION POLYESTER FOR EACH WORK LOCATION ANALYZED.

F. ALL LABELS WILL BE BASED ON RECOMMENDED OVERCURRENT SETTINGS AND WILL BE PROVIDED AFTER THE RESULTS OF THE ANALYSIS HAVE BEEN PRESENTED TO THE OWNER AND AFTER ANY SYSTEM CHANGES, UPGRADES, OR MODIFICATIONS HAVE BEEN INCORPORATED IN THE SYSTEM.

G. THE LABEL SHALL INCLUDE THE FOLLOWING INFORMATION, AT A MINIMUM:

1. LOCATION DESIGNATION.
2. NOMINAL VOLTAGE.
3. FLASH PROTECTION BOUNDARY.
4. HAZARD RISK CATEGORY.
5. INCIDENT ENERGY.
6. WORKING DISTANCE.
7. ENGINEERING REPORT NUMBER , REVISION NUMBER AND ISSUE DATE.

H. LABELS SHALL BE MACHINE PRINTED, WITH NO FIELD MARKINGS.

1. FOR EACH SWITCHBOARD AND PANELBOARD, ONE ARC FLASH LABEL SHALL BE PROVIDED.

I. THE WORKPLACE ELECTRICAL SAFETY STANDARD SHALL BE FOLLOWED FOR THE ARC-FLASH CALCULATION, STUDIES AND ARC-FLASH LABELS AS THE MAIN STANDARD.

SWITCHBOARD SCHEDULE - "SWBD"

MAIN: 1200 | VOLTAGE: 480/277 | PHASE: 3 | WIRE: 4
MTG: FLOOR | AIC: 65,000

CKT #	CIRCUIT BREAKER FRAME	TRIP	POLE	DESCRIPTION	LOAD (KVA) LTG	REC	MTR	A/C	HTG	DATA	KIT	MISC	PHASE A B C
1	600	600	3	DELTA POWER UNIT 350KW								122.7	
												122.7	
												122.7	
2	250	175	3	DELTA DISPENSER 100KW								35.5	
												35.5	
												35.5	
3	250	175	3	DELTA DISPENSER 100KW								35.5	
												35.5	
												35.5	
4	100	20	3	SPARE									
5	100	30	3	SPARE									
6				SPACE									
7				SPACE									
8	100	30	3	TRANSFORMER & PANLE LP1	0.0	1.1	0.0	0.0	0.0	0.0	0.0	0.0	
					0.0	0.7	0.0	0.0	0.0	0.0	0.0	0.0	
					0.0	0.0	0.0	0.0	0.0	0.0	0.0	0.0	
					0.0	1.8	0.0	0.0	0.0	0.0	0.0	580.9	

CONNECTED LOAD (KVA):	582.6			
DEMAND LOAD (KVA):	582.6	PHASE A	574.9	159.2
		PHASE B	573.5	158.9
CONNECTED LOAD (AMPS)	700.8	PHASE C	571.0	158.2
DEMAND LOAD (AMPS):	700.8		AMPS	KVA
AMPACITY REQUIRED:	875.5			

NOTES:
1. INSTALL SWITCHBOARD ON 3" HIGH CONCRETE PAD (LENGTH AND WIDTH EXCEEDING BASE BY 3" ON ALL SIDES.)

SWBD LOAD CALCULATION

LIGHTING		0.00	KVA X	125	%	=	0.0 KVA
RECEPTACLE	TOTAL	1.77	KVA				
	1ST	10.00	KVA X	100	%	=	1.8 KVA
	REMAIN	0.00	KVA X	50	%	=	0.0 KVA
MOTORS	TOTAL	0.00	KVA X	100	%		
	LARGEST		KVA X	125	%	=	0.0 KVA
	REMAIN	0.00	KVA X	100	%	=	0.0 KVA
A/C		0.00	KVA X	100	%	=	0.0 KVA
HEATING		0.00	KVA X	100	%	=	0.0 KVA
LOCKED-OUT LOAD			KVA X	100	%	=	0.0 KVA
KITCHEN		0.00	KVA X	65	%	=	0.0 KVA
DATA PROCESSING		0.00	KVA x	85	%	=	0.0 KVA
MISCELLANEOUS (EV CHARGERS)		580.87	KVA X	125	%	=	726.1 KVA 873.3 AMPS
TOTAL						=	727.9 KVA
						=	875.5 AMPS

PANELBOARD SCHEDULE

LP1 — ☑ NEW ☐ EXISTING

RATING (AMPS):	MAIN TYPE:	VOLTAGE:	PHASE:	NEUTRAL:	WIRE:	ENCLOSURE	MOUNTING	FEED THRU LUGS:	ISOLATED GND	AIC:
60A	THERMAL MAG	208Y/120V	3	100%	4	NEMA 3R	SURFACE	NO	NO	22K

CKT #	TYPE	NOTE	TRIP / POLE	DESCRIPTION	BRANCH CKT Ø	N	C	LOAD (KVA) LTG	REC	MTR	A/C	HTG	DATA	KIT	MISC	PHASE	LOAD (KVA) LTG	REC	MTR	A/C	HTG	DATA	KIT	MISC	BRANCH CKT Ø	N	C	DESCRIPTION	TRIP / POLE	NOTE	TYPE	CKT #
1	-	-	20/1	DISPENSER #3	SR	SR	SR		1.1						0.0	A	0.0											SPARE	20/1	-	-	2
3	-	-	20/1	CONTROLS	-	-	-		0.7						0.0	B		0.0										SPARE	20/1	-	-	4
5	-	-		BUSSED SPACE	-	-	-								0.0	C									-	-	-	BUSSED SPACE	-	-	-	6
7	-	-		BUSSED SPACE	-	-	-								0.0	A									-	-	-	BUSSED SPACE	-	-	-	8
9	-	-		BUSSED SPACE	-	-	-								0.0	B									-	-	-	BUSSED SPACE	-	-	-	10
11	-	-		BUSSED SPACE	-	-	-								0.0	C									-	-	-	BUSSED SPACE	-	-	-	12
								0.0	1.8	0.0	0.0	0.0	0.0	0.0	0.0		0.0	0.0	0.0	0.0	0.0	0.0	0.0	0.0								

LIGHTING (KVA):	0.0
RECEPTACLES (KVA):	1.8
MOTORS (KVA):	0.0
A/C (KVA):	0.0
HEATING (KVA):	0.0
DATA PROCESSING (KVA):	0.0
KITCHEN(KVA): 0 PIECES	0.0
MISCELLANEOUS (KVA):	0.0

PHASE BREAKDOWN		
PHASE A	1	8.9
PHASE B	1	5.8
PHASE C	0	0.0
	KVA	AMPS
BASIS OF DESIGN:	SIEMENS	

TYPES	
ST =	SHUNT TRIP
GF =	GROUND FAULT
AF =	ARC FLASH
KK =	KIRK KEY

NOTES	
EX =	EXISTING
ME =	MATCH EXISTING
SR =	SEE RISER(1-LINE)
ES =	SEE EQUIP. CONN. SCH.

CONNECTED LOAD (KVA):	1.8
DEMAND LOAD (KVA):	1.8
CONNECTED LOAD (AMPS):	4.9
DEMAND LOAD (AMPS):	4.9
AMPACITY REQUIRED:	4.9

NOTES:

EVgo FAST CHARGING

EVgo SERVICES, LLC
11835 W OLYMPIC BLVD STE 900 E
LOS ANGELES, CA 90064

WB Engineers+ Consultants

EVstrategies

Job Name:
WAWA #0157
NORTH WALES

593 DEKALB PIKE. -EV
NORTH WALES,PA 19454

SHEET DESCRIPTION:
ELECTRICAL SPEC (CONT.)
SWB & PNL SCHEDULES

COMMONWEALTH OF PENNSYLVANIA REGISTERED PROFESSIONAL ENGINEER DAVID CONIGLIO NO PE[illegible]

Project #: P17773
File:
Drawn by: KC
Date(s): 07/25/2022
2022.07.25 – DD100 PRELIMINARY DESIGN
2022.08.08 – ISSUED FOR PERMIT

E-6

ELECTRICAL GENERAL NOTES

1. ALL WORK SHALL BE INSTALLED CONCEALED UNLESS OTHERWISE NOTED.
2. CONTRACTOR SHALL FIELD VERIFY DIMENSIONS OF FINISHED CONSTRUCTION PRIOR TO FABRICATION AND INSTALLATION OF FIXTURES AND EQUIPMENT.
3. MOUNTING HEIGHTS OF EQUIPMENT AND DEVICES SHALL BE AS INDICATED ON THE ARCHITECTURAL DRAWINGS. WHERE MOUNTING HEIGHTS ARE NOT GIVEN ON THE ARCHITECTURAL DRAWINGS, UTILIZE THE FOLLOWING MOUNTING HEIGHTS UNLESS OTHERWISE NOTED (ALL DIMENSIONS TO CENTERLINE OF BOX):
   A. RECEPTACLES (WALL MOUNTED) - 18 A.F.F.
4. ELECTRICAL CONTRACTOR SHALL VISIT THE JOB SITE TO MAKE HIMSELF AWARE OF EXISTING CONDITIONS BEFORE SUBMITTING HIS PRICE.
5. THE MINIMUM RATING OF DISCONNECT SWITCHES SHALL BE EQUAL TO OR GREATER THAN THE RATING OF THE PROTECTIVE DEVICE ON THE SUPPLY SIDE OF THE DISCONNECT SWITCH. ALL RATINGS OF DISCONNECT SWITCHES AND OR FUSES/ OVER-CURRENT DEVICES SHALL BE SIZED IN ACCORDANCE WITH CODE FOR THE LOADS SERVED PER DESIGN DRAWINGS.
6. NO LOW VOLTAGE WIRING SHALL BE PERMITTED IN THE SAME RACEWAY AS LINE VOLTAGE POWER WIRING.
7. ALL JUNCTION OR OUTLET BOXES SHALL BE INSTALLED SO AS TO ALLOW ACCESS TO COVER. PROVIDE APPROVED ACCESS DOORS OR PLATES AS REQUIRED IN AREAS WHERE UNOBSTRUCTED ACCESS TO BOX OR OUTLET IS NOT POSSIBLE.
8. AT ALL EMPTY CONDUITS PROVIDE BUSHINGS AT ENDS AND DRAG WIRES.
9. ELECTRICAL CONTRACTOR SHALL PROVIDE AN ELECTRICAL INSPECTION APPROVAL CERTIFICATE TO OWNER UPON COMPLETION OF WORK.
10. CIRCUIT ASSIGNMENTS FOR, RECEPTACLES, WIRING DEVICES, AND ELECTRICAL EQUIPMENT ARE DESIGNATED BY THE NUMBER SHOWN ADJACENT TO THESE DEVICES / EQUIPMENT. PROVIDE CONDUITS, WIRES AND BOXES REQUIRED TO ENERGIZE THE EQUIPMENT AS SHOWN.
11. CIRCUIT NUMBERS ARE FOR REFERENCE ONLY. CIRCUIT NUMBERS ARE INTENDED TO BE USED FOR QUANTITIES AND FOR DESIGNATING WHAT OUTLETS (FIXTURES, EQUIPMENT, ETC.) WILL BE ON THE SAME CIRCUIT. CONTRACTOR SHALL REARRANGE CIRCUITS PER FIELD CONDITIONS SO THAT LOAD VALUES FOR EACH PHASE DO NOT EXCEED CODE REQUIREMENTS AND TO BALANCE THE LOADS AT THE PANELS PER SPECIFICATIONS. THE ELECTRICAL CONTRACTOR SHALL PROVIDE CIRCUITS WITH PROPER PHASE SEQUENCES FOR EVERY REQUIRED NEUTRAL WIRE THAT IS SHARED. ELECTRICAL CONTRACTOR SHALL DOCUMENT ALL AFFECTED CIRCUITS, LABEL EACH OUTLET COVER WITH ACTURAL PANEL DESIGNATION AND CIRCUIT NUMBER, AND PROVIDE AS-BUILT PANEL DIRECTORIES AND DRAWINGS PER SPECIFICATIONS.
12. ALL WORK SHALL COMPLY WITH REQUIREMENTS OF THE NATIONAL ELECTRICAL CODE, LOCAL BUILDING CODE AND BUILDING MANAGEMENT RULES AND REGULATIONS.
13. ¾" (21mm) SHALL BE THE MINIMUM CONDUIT INSTALLED.

A, AMP	AMPERE
ADA	AMERICANS WITH DISABILITIES ACT
AF	AMPERE FRAME
AFF	ABOVE FINISH FLOOR
AHJ	AUTHORITY HAVING JURISDICTION
AIC	AMPS INTERRUPTING CAPACITY
AT	AMPERE TRIP
ATS	AUTOMATIC TRANSFER SWITCH
AWG	AMERICAN WIRE GAUGE
BLDG	BUILDING
BMS	BUILDING MANAGEMENT SYSTEM
C	CONDUIT
CAT	CATALOG
CB	CIRCUIT BREAKER
CD	CANDELA
CFSD	COMBINATION FIRE/SMOKE DAMPER
CKT	CIRCUIT
CLG	CEILING
CO	CONDUIT ONLY
CU	COPPER
DACS	DIGITAL ALARM COMMUNICATION SYSTEM
DACT	DIGITAL ALARM COMMUNICATION TERMINAL
DGP	DATA GATHERING PANEL
DIFF	DIFFERENTIAL
DISC	DISCONNECT
DN	DOWN
DWG	DRAWING
ELEC	ELECTRICAL
EMR	ELEVATOR MACHINE ROOM
EMT	ELECTRICAL METAL TUBING
FACP	FIRE ALARM CONTROL PANEL
FBO WORK	FURNISH BY OTHER DIVISION OF
FCO	FUSE CUTOUT BOX
FCS	FIRE COMMAND STATION
FSD	FIRE SMOKE DAMPER
FU	FUSE
FL	FLOOR
FLEX	FLEXIBLE
FT	FEET OR FOOT
GA	GAUGE
G, GRD	GROUND
GC	GENERAL CONTRACTOR
GFI	GROUND FAULT INTERRUPTER
HID	HIGH INTENSITY DISCHARGE
HP	HORSEPOWER
HVAC	HEATING, VENTILATING & AIR CONDITIONING DIVISION ON WORK
HZ	HERTZ
IC	INTERRUPTING CAPACITY
JB	JUNCTION BOX
LEMCS SYSTEM	LOCAL EMERGENCY CONTROL
LTG	LIGHTING
MCB	MAIN CIRCUIT BREAKER
MECH	MECHANICAL
MER	MECHANICAL EQUIPMENT ROOM
MIN	MINIMUM
MLO	MAIN LUGS ONLY
MTD	MOUNTED
N	NEUTRAL
NC	NORMALLY CLOSED
NO	NUMBER
NTS	NOT TO SCALE
OL	OVERLOAD DEVICE
OFCI	OWNER FURNISHED CONTRACTOR INSTALLED
P	POLE
PNL	PANEL
Ø	PHASE
RA	RETURN AIR
RG, RAG	RETURN AIR GRILLE
SN	SOLID NEUTRAL
SPCP	STAIR PRESSURIZATION SYSTEM CONTROL PANEL
STP	STAIR PRESSURIZATION
SW	SWITCH
SWBD	SWITCHBOARD
TEL	TELEPHONE
TYP	TYPICAL
UON	UNLESS OTHERWISE NOTED
UL	UNDERWRITERS LABORATORIES
UV	ULTRAVIOLET
VESDA	VERY EARLY SMOKE DETECTION APPARATUS
V	VOLTAGE
VDC	DIRECT CURRENT VOLTAGE
VFD	VARIABLE FREQUENCY DRIVE
WP	WEATHER PROOF

POWER AND SIGNAL DEVICE LEGEND

SYMBOL	DESCRIPTION
	UON, 20A, 125V, 2P, 3W, GROUNDED WALL MOUNTED DUPLEX AND DOUBLE DUPLEX RECEPTACLES, NEMA 5-20R. (COLOR PER ARCHITECT). ALL OUTLETS SHALL BE LABELED WITH ITS SOURCE PANEL AND BREAKER # ID. "WP" - INDICATES WEATHERPROOF (TYP FOR WIRING DEVICES) "C" - INDICATES COUNTER HEIGHT (TYP FOR WIRING DEVICES)
	SHADING FOR DUPLEX OR DOUBLE DUPLEX PER ABOVE INDICATES DEDICATED CIRCUIT
	UON, 20A, 125V, 2P, 3W, GROUNDED WALL MOUNTED DUPLEX AND DOUBLE DUPLEX RECEPTACLES WITH GROUND FAULT CIRCUIT INTERRUPTER, NEMA 5-20R. WEATHER PROOF (COLOR PER ARCHITECT). ALL OUTLETS SHALL BE LABELED WITH ITS SOURCE PANEL AND BREAKER # ID.
J	ELECTRICAL JUNCTION BOX FOR HARDWIRED EQUIPMENT. (2) INDICATES DOUBLE-GANG BOX. (F) INDICATES FLOOR RECESSED. (CE) INDICATES CEILING RECESSED. (AFC) INDICATES ABOVE FINISHED CEILING, SURFACE MTD.
	SURFACE MOUNTED PANELBOARD - SOLID INDICATES NEW, UNSHADED/DASHED INDICATES EXISTING
T	DRY TYPE TRANSFORMER - SIZE AS INDICATED ON THE DRAWINGS
M	ELECTRICAL METER OR SUB-METER AS IDENTIFIED ON THE DRAWINGS
1 CKT PNL-(#) 2 CKT PNL-(#),(#) 3 CKT PNL-(#),(#),(#)	ONE, TWO, OR THREE HOME RUNS TO ELECTRICAL PANEL 'PNL' - INDICATED PANEL NAME '#' - INDICATES CIRCUIT NUMBER, U.O.N.
	GROUND BAR

ONE LINE/RISER DIAGRAM LEGEND

SYMBOL	DESCRIPTION
##A/#P	CIRCUIT BREAKER "##A" - INDICATES AMPERAGE RATING "#P" - INDICATES NUMBER OF POLES
##AS ##AF	FUSED DISCONNECT SWITCH "##AS" - INDICATES SWITCH SIZE "##AF" - INDICATES FUSE SIZE
#A/#P	NON-FUSED DISCONNECT SWITCH "#A" - INDICATES SWITCH SIZE "#P" - INDICATES NUMBER OF POLES
480Δ OR 600V 120Y/208V	TRANSFORMER, 480V INDICATES PRIMARY VOLTAGE, 120/208V INDICATES SECONDARY VOLTAGE
	GROUNDING CONNECTION
PANEL PP1	PANELBOARD - REFER TO PANELBOARD SCHEDULES FOR ADDITIONAL INFORMATION

EVgo FAST CHARGING

EVgo SERVICES, LLC
11835 W OLYMPIC BLVD STE 900 E
LOS ANGELES, CA 90064

WB Engineers+ Consultants

EVstrategies

Job Name:
WAWA #0157
NORTH WALES

593 DEKALB PIKE. -EV
NORTH WALES,PA 19454

SHEET DESCRIPTION:
ELECTRICAL SYMBOLS, & ABBREVIATIONS & GENERAL NOTES

COMMONWEALTH OF PENNSYLVANIA REGISTERED PROFESSIONAL ENGINEER

Project #: P17773
File:
Drawn by: KC
Date(s): 07/25/2022
2022.07.25 – DD100 PRELIMINARY DESIGN
2022.08.08 – ISSUED FOR PERMIT

E-7

NOTE:

1. REFER TO DRAWING E-3 FOR ADDTIONAL INFORMATION.

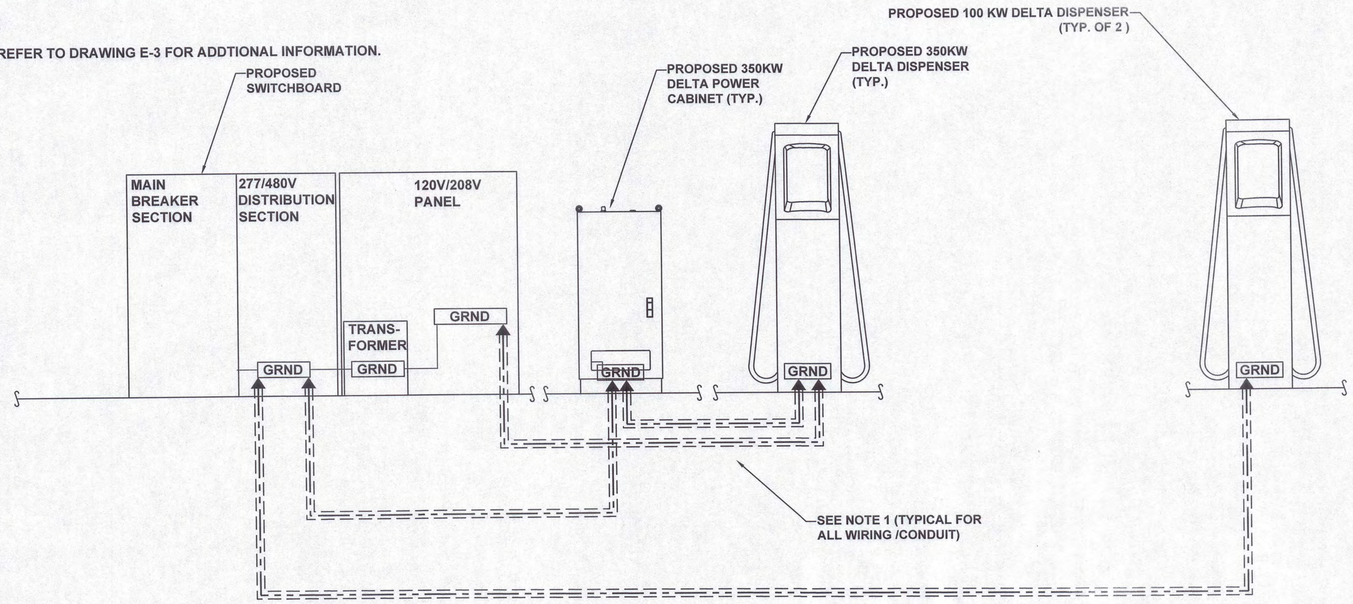

A G-1 SCHEMATIC GROUNDING DETAIL

SCALE: N.T.S.

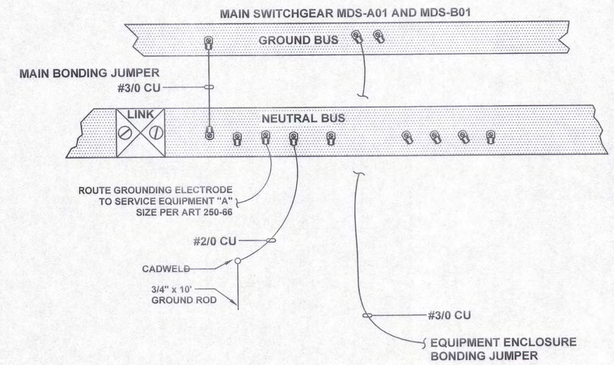

E G-1 SERVICE GROUNDING & BONDING DETAIL

SCALE: N.T.S.

NOTE

1. REBAR BONDED TOGETHER WITH STEEL TIE WIRES OR EXOTHERMIC WELDING
2. COORDINATE EXACT PAD DETAILS REQUIREMENTS WITH ACE FOR PMT AND WITH SWITCHBOARD MANUFACTURER FOR SWITCHBOARD AS REQUIRED.

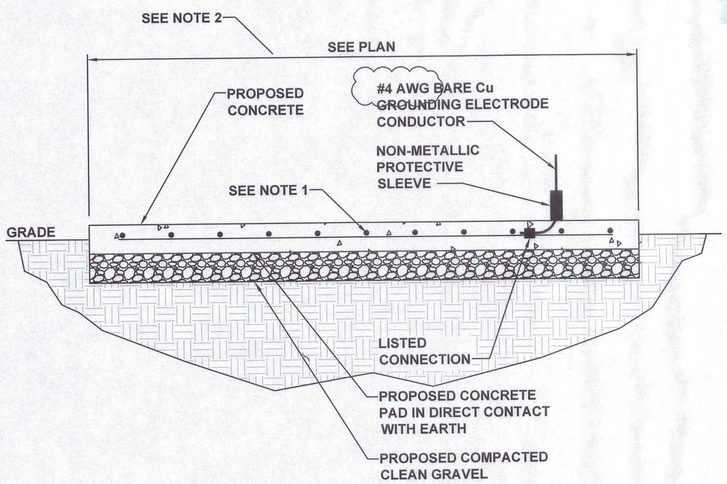

B G-1 CONCRETE ENCASED ELECTRODE DETAIL

SCALE: N.T.S.

CADWELD CONNECTIONS
OR ENGINEER APPROVED EQUAL

CABLE TO REBAR TEE CONNECTION HORIZONTAL CABLE TAP TO VERTICAL REBAR TYPE RJ	**HORIZONTAL SPLICE** SPLICE OF HORIZONTAL CABLES TYPE SS	**PARALLEL HORIZONTAL CONDUCTORS** PARALLEL THROUGH CONNECTION OF HORIZONTAL CABLES TYPE PT
BURNDY CONNECTIONS OR ENGINEER APPROVED EQUAL	**HORIZONTAL STEEL SURFACE** TO FLAT STEEL SURFACE OR HORIZONTAL PIPE TYPE HS	**PARALLEL HORIZONTAL CONDUCTORS** PARALLEL DEAD END TAP OR HORIZONTAL THRU CONDUCTOR TYPE PC
BOND JUMPER FIELD FABRICATED GREEN STRANDED INSULATED TYPE 2-YA-2	**VERTICAL PIPE** CABLE DOWN AT 45° TO RANGE OF VERTICAL PIPES TYPE VS	**VERTICAL STEEL SURFACE** CABLE DOWN AT 45° TO VERTICAL STEEL SURFACE INCLUDING PIPE TYPE VS
COPPER LUGS TWO HOLE - LONG BARREL LENGTH TYPE YA-2	**HORIZONTAL TEE** TEE OF HORIZONTAL RUN AND TAP CABLES TYPE TA	**THROUGH CABLE TO GROUND ROD** THROUGH CABLE TO TOP OF GROUND ROD TYPE GT

C G-1 CADWELD CONNECTION DETAIL

SCALE: N.T.S.

NOTES:

1. ALL HARDWARE SHALL BE STAINLESS STEEL 3/8" DIAMETER OR LARGER. ALL HARDWARE 18-8 STAINLESS STEEL INCLUDING LOCK WASHERS, COAT ALL SURFACES WITH AN ANTI-OXIDANT COMPOUND BEFORE MATING.
2. FOR GROUND BOND TO STEEL ONLY: INSERT A CADMIUM FLAT WASHER BETWEEN LUG AND STEEL, COAT ALL SURFACES WITH AN ANTI-OXIDANT COMPOUND BEFORE MATING.
3. 2014 NEC 250.121 EXCEPTION: A WIRE-TYPE EQUIPMENT GROUNDING CONDUCTOR INSTALLED IN COMPLIANCE WITH 250.6(A) AND THE APPLICABLE REQUIREMENTS FOR BOTH THE EQUIPMENT GROUNDING CONDUCTOR AND THE GROUNDING ELECTRODE CONDUCTOR IN PARTS II, III, AND VI OF THIS ARTICLE SHALL BE PERMITTED TO SERVE AS BOTH AN EQUIPMENT GROUNDING CONDUCTOR AND A GROUNDING ELECTRODE CONDUCTOR.

D G-1 GROUNDING NOTES

SCALE: N.T.S.

EVgo FAST CHARGING

EVgo SERVICES, LLC
11835 W OLYMPIC BLVD STE 900 E
LOS ANGELES, CA 90064

WB Engineers+ Consultants

EV strategies

Job Name:
WAWA #0157
NORTH WALES

593 DEKALB PIKE. -EV
NORTH WALES,PA 19454

SHEET DESCRIPTION:
SCHEMATIC GROUNDING DETAIL

Project #: P17773
File:
Drawn by: KC
Date(s): 07/25/2022
2022.07.25 – DD100 PRELIMINARY DESIGN
2022.08.08 – ISSUED FOR PERMIT

G-1

GENERAL CONSTRUCTION NOTES

1. FOR THE PURPOSE OF CONSTRUCTION DRAWINGS, THE FOLLOWING DEFINITIONS SHALL APPLY
   GENERAL CONTRACTOR: TBD
   OWNER: EVGO
2. ALL SITE WORK SHALL BE COMPLETED AS INDICATED ON THE DRAWINGS.
3. THE GENERAL CONTRACTOR SHALL VISIT THE SITE AND SHALL FAMILIARIZE THEMSELVES WITH ALL CONDITIONS AFFECTING THE PROPOSED WORK AND SHALL MAKE PROVISIONS. GENERAL CONTRACTOR SHALL BE RESPONSIBLE FOR FAMILIARIZING THEMSELVES WITH ALL CONTRACT DOCUMENTS, FIELD CONDITIONS, DIMENSIONS, AND CONFIRMING THAT THE WORK MAY BE ACCOMPLISHED AS SHOWN PRIOR TO PROCEEDING WITH CONSTRUCTION. ANY DISCREPANCIES SHALL BE BROUGHT TO THE ATTENTION OF THE ENGINEER PRIOR TO THE COMMENCEMENT OF WORK.
4. ALL MATERIALS FURNISHED AND INSTALLED SHALL BE IN STRICT ACCORDANCE WITH ALL APPLICABLE CODES, REGULATIONS, AND ORDINANCES. GENERAL CONTRACTOR SHALL ISSUE ALL APPROPRIATE NOTICES AND COMPLY WITH ALL LAWS, ORDINANCES, RULES, REGULATIONS, AND LAWFUL ORDERS OF ANY PUBLIC AUTHORITY REGARDING THE PERFORMANCE OF WORK.
5. ALL WORK CARRIED OUT SHALL COMPLY WITH ALL APPLICABLE MUNICIPAL AND UTILITY COMPANY SPECIFICATIONS AND LOCAL JURISDICTIONAL CODES, ORDINANCES, AND APPLICABLE REGULATIONS.
6. UNLESS NOTED OTHERWISE, THE WORK SHALL INCLUDE FURNISHING MATERIALS, EQUIPMENT, APPURTENANCES, AND LABOR NECESSARY TO COMPLETE ALL INSTALLATIONS AS INDICATED ON THE DRAWINGS.
7. PLANS ARE NOT TO BE SCALED. THESE PLANS ARE INTENDED TO BE A DIAGRAMMATIC OUTLINE ONLY UNLESS OTHERWISE NOTED. DIMENSIONS SHOWN ARE TO FINISH SURFACES UNLESS OTHERWISE NOTED. SPACING BETWEEN EQUIPMENT IS THE MINIMUM REQUIRED CLEARANCE. THEREFORE, IT IS CRITICAL TO FIELD VERIFY DIMENSIONS, SHOULD THERE BE ANY QUESTIONS REGARDING THE CONTRACT DOCUMENTS, THE CONTRACTOR SHALL BE RESPONSIBLE FOR OBTAINING A CLARIFICATION FROM THE ENGINEER PRIOR TO PROCEEDING WITH THE WORK. DETAILS ARE INTENDED TO SHOW DESIGN INTENT. MODIFICATIONS MAY BE REQUIRED TO SUIT JOB DIMENSIONS OR CONDITIONS AND SUCH MODIFICATIONS SHALL BE INCLUDED AS PART OF WORK AND PREPARED BY THE ENGINEER PRIOR TO PROCEEDING WITH WORK.
8. THE CONTRACTOR SHALL INSTALL ALL EQUIPMENT AND MATERIALS IN ACCORDANCE WITH MANUFACTURER'S RECOMMENDATIONS UNLESS SPECIFICALLY STATED OTHERWISE.
9. IF THE SPECIFIED EQUIPMENT CANNOT BE INSTALLED AS SHOWN ON THESE DRAWINGS, THE CONTRACTOR SHALL PROPOSE AN ALTERNATIVE INSTALLATION SPACE FOR APPROVAL BY THE ENGINEER PRIOR TO PROCEEDING.
10. THE GENERAL CONTRACTOR SHALL BE RESPONSIBLE FOR THE SAFETY OF WORK AREA, ADJACENT AREAS AND BUILDING OCCUPANTS THAT ARE LIKELY TO BE AFFECTED BY THE WORK UNDER THIS CONTRACT. WORK SHALL CONFORM TO ALL OSHA REQUIREMENTS AND THE LOCAL JURISDICTION.
11. THE GENERAL CONTRACTOR SHALL COORDINATE WORK AND SCHEDULE WORK ACTIVITIES WITH OTHER DISCIPLINES.
12. CONSTRUCTION SHALL BE DONE IN A WORKMANLIKE MANNER BY COMPETENT EXPERIENCED WORKMAN IN ACCORDANCE WITH APPLICABLE CODES AND THE BEST ACCEPTED PRACTICE.
13. WORK PREVIOUSLY COMPLETED IS REPRESENTED BY LIGHT SHADED LINES AND NOTES. THE SCOPE OF WORK FOR THIS PROJECT IS REPRESENTED BY DARK SHADED LINES AND NOTES. CONTRACTOR SHALL NOTIFY THE GENERAL CONTRACTOR OF ANY EXISTING CONDITIONS THAT DEVIATE FROM THE DRAWINGS PRIOR TO BEGINNING CONSTRUCTION.
14. THE CONTRACTOR SHALL PROVIDE WRITTEN NOTICE TO THE CONSTRUCTION MANAGER 48 HOURS PRIOR TO COMMENCEMENT OF WORK.
15. THE CONTRACTOR SHALL PROTECT EXISTING IMPROVEMENTS, PAVEMENTS, CURBS, LANDSCAPING AND STRUCTURES. ANY DAMAGED PART SHALL BE REPAIRED AT CONTRACTOR'S EXPENSE TO THE SATISFACTION OF THE OWNER.
16. THE CONTRACTOR SHALL CONTACT UTILITY LOCATING SERVICES PRIOR TO THE START OF CONSTRUCTION.
17. THE GENERAL CONTRACTOR SHALL COORDINATE AND MAINTAIN ACCESS FOR ALL TRADES AND CONTRACTORS TO THE SITE AND/OR BUILDING.
18. THE GENERAL CONTRACTOR SHALL BE RESPONSIBLE FOR SECURITY OF THE SITE FOR THE DURATION OF CONSTRUCTION UNTIL JOB COMPLETION.
19. THE GENERAL CONTRACTOR SHALL MAINTAIN IN GOOD CONDITION ONE COMPLETE SET OF PLANS WITH ALL REVISIONS, ADDENDA, AND CHANGE ORDERS ON THE PREMISES AT ALL TIMES.
20. THE CONTRACTOR SHALL PROVIDE PORTABLE FIRE EXTINGUISHERS WITH A RATING OF NOT LESS THAN 2-A:10-B:C AND SHALL BE WITHIN 25 FEET OF TRAVEL DISTANCE TO ALL PORTIONS OF WHERE THE WORK IS BEING COMPLETED DURING CONSTRUCTION.
21. ALL EXISTING ACTIVE SEWER, WATER, GAS, ELECTRIC, AND OTHER UTILITIES SHALL BE PROTECTED AT ALL TIMES, AND WHERE REQUIRED FOR THE PROPER EXECUTION OF THE WORK, SHALL BE RELOCATED AS DIRECTED BY THE ENGINEER. EXTREME CAUTION SHOULD BE USED BY THE CONTRACTOR WHEN EXCAVATING OR DRILLING PIERS AROUND OR NEAR UTILITIES. THE CONTRACTOR SHALL PROVIDE SAFETY TRAINING FOR THE WORKING CREW. THIS SHALL INCLUDE BUT NOT BE LIMITED TO A) FALL PROTECTION, B) CONFINED SPACE, C) ELECTRICAL SAFETY, AND D) TRENCHING & EXCAVATION.

GENERAL CONSTRUCTION NOTES CONT.

22. ALL EXISTING INACTIVE SEWER, WATER, GAS, ELECTRIC, AND OTHER UTILITIES, WHICH INTERFERE WITH THE EXECUTION OF THE WORK, SHALL BE REMOVED, CAPPED, PLUGGED OR OTHERWISE DISCONNECTED AT POINTS WHICH WILL NOT INTERFERE WITH THE EXECUTION OF THE WORK, AS DIRECTED BY THE ENGINEER, AND SUBJECT TO THE APPROVAL OF THE OWNER AND/OR LOCAL UTILITIES.
23. THE AREAS OF THE OWNER'S PROPERTY DISTURBED BY THE WORK AND NOT COVERED BY THE EQUIPMENT OR DRIVEWAY, SHALL BE GRADED TO A UNIFORM SLOPE, AND STABILIZED TO PREVENT EROSION.
24. CONTRACTOR SHALL MINIMIZE DISTURBANCE TO THE EXISTING SITE DURING CONSTRUCTION. EROSION CONTROL MEASURES, IF REQUIRED DURING CONSTRUCTION, SHALL BE IN CONFORMANCE WITH THE FEDERAL AND LOCAL JURISDICTION FOR EROSION AND SEDIMENT CONTROL.
25. NO FILL OR EMBANKMENT MATERIAL SHALL BE PLACED ON FROZEN GROUND. FROZEN MATERIALS, SNOW OR ICE SHALL NOT BE PLACED IN ANY FILL OR EMBANKMENT.
26. THE SUBGRADE SHALL BE BROUGHT TO A SMOOTH UNIFORM GRADE AND COMPACTED TO 95 PERCENT STANDARD PROCTOR DENSITY UNDER PAVEMENT AND STRUCTURES AND 80 PERCENT STANDARD PROCTOR DENSITY IN OPEN SPACE. ALL TRENCHES IN PUBLIC RIGHT OF WAY SHALL BE BACKFILLED WITH FLOWABLE FILL OR OTHER MATERIAL PRE-APPROVED BY THE LOCAL JURISDICTION.
27. ALL NECESSARY RUBBISH, STUMPS, DEBRIS, STICKS, STONES, AND OTHER REFUSE SHALL BE REMOVED FROM THE SITE AND DISPOSED OF IN A LAWFUL MANNER.
28. ALL BROCHURES, OPERATING AND MAINTENANCE MANUALS, CATALOGS, SHOP DRAWINGS, AND OTHER DOCUMENTS SHALL BE TURNED OVER TO THE GENERAL CONTRACTOR AT COMPLETION OF CONSTRUCTION AND PRIOR TO PAYMENT.
29. THE CONTRACTOR SHALL SUBMIT A COMPLETE SET OF AS-BUILT REDLINES TO THE GENERAL CONTRACTOR UPON COMPLETION OF PROJECT AND PRIOR TO FINAL PAYMENT.
30. THE CONTRACTOR SHALL LEAVE PREMISES IN A CLEAN CONDITION.
31. THE PROPOSED FACILITY WILL BE UNMANNED AND DOES NOT REQUIRE POTABLE WATER OR SEWER SERVICE, AND IS NOT FOR HUMAN HABITATION (NO HANDICAP ACCESS REQUIRED).
32. NO OUTDOOR STORAGE OR SOLID WASTE CONTAINERS ARE PROPOSED.
33. CONTRACTORS SHALL BE RESPONSIBLE FOR OBTAINING ALL PERMITS AND INSPECTIONS REQUIRED FOR CONSTRUCTION. IF CONTRACTOR CANNOT OBTAIN A PERMIT, THEY MUST NOTIFY THE GENERAL CONTRACTOR IMMEDIATELY.
34. THE CONTRACTOR SHALL REMOVE ALL TRASH AND DEBRIS FROM THE SITE ON A DAILY BASIS.
35. INFORMATION SHOWN ON THESE DRAWINGS WAS OBTAINED FROM SITE VISITS AND/OR DRAWINGS PROVIDED BY THE SITE OWNER. CONTRACTORS SHALL NOTIFY THE ENGINEER OF ANY DISCREPANCIES PRIOR TO ORDERING MATERIAL OR PROCEEDING WITH CONSTRUCTION.

ELECTRICAL NOTES

1. THE ELECTRICAL CONTRACTOR SHALL SUPPLY AND INSTALL ANY/ALL ELECTRICAL WORK INDICATED. ANY/ALL CONSTRUCTION SHALL BE IN ACCORDANCE WITH DRAWINGS AND ANY/ALL APPLICABLE SPECIFICATIONS. IF ANY PROBLEMS ARE ENCOUNTERED BY COMPLYING WITH THESE REQUIREMENTS, CONTRACTOR SHALL NOTIFY 'CONSTRUCTION MANAGER' AS SOON AS POSSIBLE, AFTER THE DISCOVERY OF THE PROBLEMS, AND SHALL NOT PROCEED WITH THAT PORTION OF WORK, UNTIL THE 'CONSTRUCTION MANAGER' HAS DIRECTED THE CORRECTIVE ACTIONS TO BE TAKEN.
2. THE ELECTRICAL CONTRACTOR SHALL VISIT THE JOB SITE AND FAMILIARIZE THEMSELVES WITH ANY/ALL CONDITIONS AFFECTING ELECTRICAL AND COMMUNICATION INSTALLATION AND MAKE PROVISIONS AS TO THE COST THEREOF. THE CONDITION OF EXISTING ELECTRICAL EQUIP., LIGHT FIXTURES, ETC., THAT ARE PART OF THE FINAL SYSTEM, SHALL BE VERIFIED BY THE CONTRACTOR, PRIOR TO THE SUBMITTAL OF HIS BID. FAILURE TO COMPLY WITH THIS PARAGRAPH WILL IN NO WAY RELIEVE CONTRACTOR OF PERFORMING ALL WORK NECESSARY FOR A COMPLETE AND WORKING SYSTEM.
3. ALL WORK SHALL BE PERFORMED IN ACCORDANCE WITH THE LATEST EDITION OF THE NEC AND ALL CODES AND LOCAL ORDINANCES OF THE LOCAL POWER COMPANIES HAVING JURISDICTION AND SHALL INCLUDE BUT NOT BE LIMITED TO:
   A. UL - UNDERWRITERS LABORATORIES
   B. NEC - NATIONAL ELECTRICAL CODE
   C. NEMA - NATIONAL ELECTRICAL MANUFACTURERS ASSOC.
   D. OSHA - OCCUPATIONAL SAFETY AND HEALTH ACT
   E. SBC - STANDARD BUILDING CODE
   F. NFPA - NATIONAL FIRE PROTECTION ASSOCIATION
4. DO NOT SCALE ELECTRICAL DRAWINGS, REFER TO SITE PLANS AND ELEVATIONS FOR EXACT LOCATIONS OF ALL EQUIPMENT, BUT CONFIRM WITH 'CONSTRUCTION MANAGER' ANY SIZES AND LOCATIONS WHEN NEEDED.
5. EXISTING SERVICES: THE CONTRACTOR SHALL NOT INTERRUPT EXISTING SERVICES WITHOUT WRITTEN PERMISSION OF THE OWNER.
6. THE CONTRACTOR SHALL PAY FOR ANY/ALL PERMITS, FEES, INSPECTIONS AND TESTING. THE CONTRACTOR IS TO OBTAIN PERMITS AND APPROVED SUBMITTALS PRIOR TO THE WORK BEGINNING OR ORDERING THE EQUIPMENT.
7. THE TERM "PROVIDE" USED IN CONSTRUCTION DOCUMENTS AND SPECIFICATIONS, INDICATES THAT THE CONTRACTOR SHALL FURNISH AND INSTALL.

ELECTRICAL NOTES CONT.

8. THE CONTRACTOR SHALL CONFIRM WITH LOCAL UTILITY COMPANY ANY/ALL REQUIREMENTS SUCH AS THE: LUG SIZE RESTRICTIONS, CONDUIT ENTRY, SIZE OF TRANSFORMERS, SCHEDULED DOWNTIME FOR THE OWNERS' CONFIRMATION, ETC. ANY/ALL CONFLICTS SHALL BE BROUGHT TO THE ATTENTION OF THE CONSTRUCTION MANAGER, PRIOR TO BEGINNING ANY WORK.
9. CONDUCTORS: CONTRACTOR SHALL USE 98% CONDUCTIVITY COPPER WITH TYPE (THWN-2) INSULATION, 600 VOLT, COLOR CODED UNLESS SPECIFIED DIFFERENTLY ON DRAWINGS.
10. ALL (THWN-2) WIRING INSTALLATIONS TO FOLLOW MANUFACTURER'S INSTRUCTIONS AND RECOMMENDATIONS.
11. OUTLET BOXES SHALL BE PRESSED STEEL IN DRY LOCATIONS, CAST ALLOY WITH THREADED HUBS IN WET/DAMP LOCATIONS AND SPECIAL ENCLOSURES FOR OTHER CLASSIFIED AREAS.
12. IT IS NOT THE INTENT OF THESE PLANS TO SHOW EVERY MINOR DETAIL OF THE CONSTRUCTION. CONTRACTOR IS EXPECTED TO FURNISH AND INSTALL ALL ITEMS FOR A COMPLETE ELECTRICAL SYSTEM AND PROVIDE ALL REQUIREMENTS FOR THE EQUIPMENT TO BE PLACED IN PROPER WORKING ORDER. CONTRACTOR IS TO PROVIDE ALL ELECTRICAL EQUIPMENT UNLESS OTHERWISE DIRECTED.
13. ALL WORK SHALL BE PERFORMED BY A LICENSED ELECTRICAL CONTRACTOR IN A FIRST CLASS, WORKMANLIKE MANNER. THE COMPLETED SYSTEM SHALL BE FULLY OPERATIONAL AND SUBJECT TO REGULATORY INSPECTION AND APPROVAL BY CONSTRUCTION MANAGER.
14. ALL WORK SHALL BE COORDINATED WITH OTHER TRADES TO AVOID INTERFERENCE WITH THE PROGRESS OF CONSTRUCTION.
15. CONTRACTOR SHALL GUARANTEE ANY/ALL MATERIALS AND WORK FREE FROM DEFECTS FOR A PERIOD OF NOT LESS THAN ONE YEAR FROM DATE OF ACCEPTANCE.
16. THE CORRECTION OF ANY DEFECTS SHALL BE COMPLETED WITHOUT ANY ADDITIONAL CHARGE AND SHALL INCLUDE THE REPLACEMENT OR THE REPAIR OF ANY OTHER PHASE OF THE INSTALLATION, WHICH MAY HAVE BEEN DAMAGED THEREIN.
17. ADEQUATE AND REQUIRED LIABILITY INSURANCE SHALL BE PROVIDED FOR PROTECTION AGAINST PUBLIC LOSS AND ANY/ALL PROPERTY DAMAGE FOR THE DURATION OF WORK.
18. PROVIDE AND INSTALL CONDUIT, CONDUCTORS, PULL WIRES, BOXES, COVER PLATES AND DEVICES FOR ALL OUTLETS AS INDICATED.
19. TRENCHING AND BACKFILL: THE CONTRACTOR SHALL PROVIDE FOR ALL UNDERGROUND INSTALLED CONDUIT AND/OR CABLES INCLUDING EXCAVATION AND BACKFILLING AND COMPACTION. REFER TO GENERAL SITE WORK NOTES.
20. MATERIALS, PRODUCTS AND EQUIPMENT, INCLUDING ALL COMPONENTS THEREOF, SHALL BE NEW AND SHALL APPEAR ON THE LIST OF U.L. APPROVED ITEMS AND SHALL MEET OR EXCEED THE REQUIREMENTS OF THE NEC, NEMA AND IEEE.
21. CONTRACTOR SHALL SUBMIT SHOP DRAWINGS OR MANUFACTURES CATALOG INFORMATION OF ANY/ALL LIGHTING FIXTURES, SWITCHES AND ALL OTHER ELECTRICAL ITEMS FOR APPROVAL BY THE CONSTRUCTION MANAGER PRIOR TO INSTALLATION.
22. ANY CUTTING OR PATCHING DEEMED NECESSARY FOR ELECTRICAL WORK IS THE ELECTRICAL CONTRACTORS RESPONSIBILITY AND SHALL BE INCLUDED IN THE COST FOR WORK AND PERFORMED TO THE SATISFACTION OF THE 'CONSTRUCTION MANAGER' UPON FINAL ACCEPTANCE.
23. THE ELECTRICAL CONTRACTOR SHALL LABEL ALL PANELS WITH ONLY TYPEWRITTEN DIRECTORIES.
24. DISCONNECT SWITCHES SHALL BE H.P. RATED HEAVY-DUTY, QUICK-MAKE AND QUICK-BREAK ENCLOSURES, AS REQUIRED BY EXPOSURE TYPE.
25. ALL CONNECTIONS EXCEPT THE EV CHARGE CABLE TERMINATION IN THE CHARGE POST SHALL BE MADE WITH A PROTECTIVE COATING OF AN ANTI-OXIDE COMPOUND SUCH AS "NOALOX" BY IDEAL INDUSTRIAL INC., COAT ALL WIRE SURFACES BEFORE CONNECTING. EXPOSED COPPER & COPPER SURFACES, INCLUDING GROUND BARS, SHALL BE TREATED - NO SUBSTITUTIONS.
26. ALL EXTERIOR AND INTERIOR ABOVE GROUND CONDUIT SHALL BE RIGID UNLESS SPECIFIED OTHERWISE. ALL BURIED CONDUITS SHALL BE SCH 40 PVC UNLESS SPECIFIED OTHERWISE.
27. RACEWAYS: CONDUIT SHALL BE SCHEDULE 40 PVC, MEETING OR EXCEEDING NEMA TC2 - 1990. THE CONTRACTOR SHALL PLUG AND CAP EACH END OF SPARE AND EMPTY CONDUITS AND PROVIDE TWO SEPARATE PULL STRINGS - 200 LBS TEST POLYETHYLENE CORD. ALL CONDUIT BENDS SHALL BE A MINIMUM OF 3 FT. RADIUS. RGS CONDUITS WHEN SPECIFIED, SHALL MEET UL-6 FOR GALVANIZED STEEL. ALL FITTINGS SHALL BE SUITABLE FOR USE WITH THREADED RIGID CONDUIT. COAT ALL THREADS WITH 'BRITE ZINC' OR 'GOLD GALV'.
28. SUPPORT OF ALL ELECTRICAL WORK SHALL BE AS REQUIRED BY NEC.
29. CONNECTORS FOR POWER CONDUCTORS: CONTRACTOR SHALL USE PRESSURE TYPE INSULATED TWIST-ON CONNECTORS FOR NO. 10 AWG AND SMALLER. USE SOLDERLESS MECHANICAL TERMINAL LUGS FOR NO. 8 AWG AND LARGER.
30. THE CONTRACTOR SHALL PLACE TWO LENGTHS OF WARNING TAPE AT A DEPTH OF 12" BELOW GROUND AND DIRECTLY ABOVE ELECTRICAL SERVICE CONDUITS. CAUTION TAPE TO READ "CAUTION BURIED ELECTRIC".
31. WHEN DIRECTIONAL BORING IS REQUIRED, CONTRACTOR SHALL INSTALL A LOOSE TONING WIRE WITHIN INSTALLED CONDUIT TO ALLOW FOR IDENTIFICATION OF UNDERGROUND CONDUITS.
32. ALL BOLTS SHALL BE STAINLESS STEEL.
33. ALL MATERIALS AND EQUIPMENT SUPPLIED AND INSTALLED BY THE CONTRACTOR SHOULD BE NEW AND UNUSED.

EVgo FAST CHARGING

EVgo SERVICES, LLC
11835 W OLYMPIC BLVD STE 900 E
LOS ANGELES, CA 90064

WB Engineers+ Consultants

EVstrategies

Job Name:
WAWA #0157
NORTH WALES

593 DEKALB PIKE. -EV
NORTH WALES,PA 19454

SHEET DESCRIPTION:
ELECTRICAL
GENERAL NOTES

Project #: P17773
File:
Drawn by: KC
Date(s): 07/25/2022
2022.07.25 – DD100 PRELIMINARY DESIGN
2022.08.08 – ISSUED FOR PERMIT

GN-1

SURVEY FOR REFERENCE

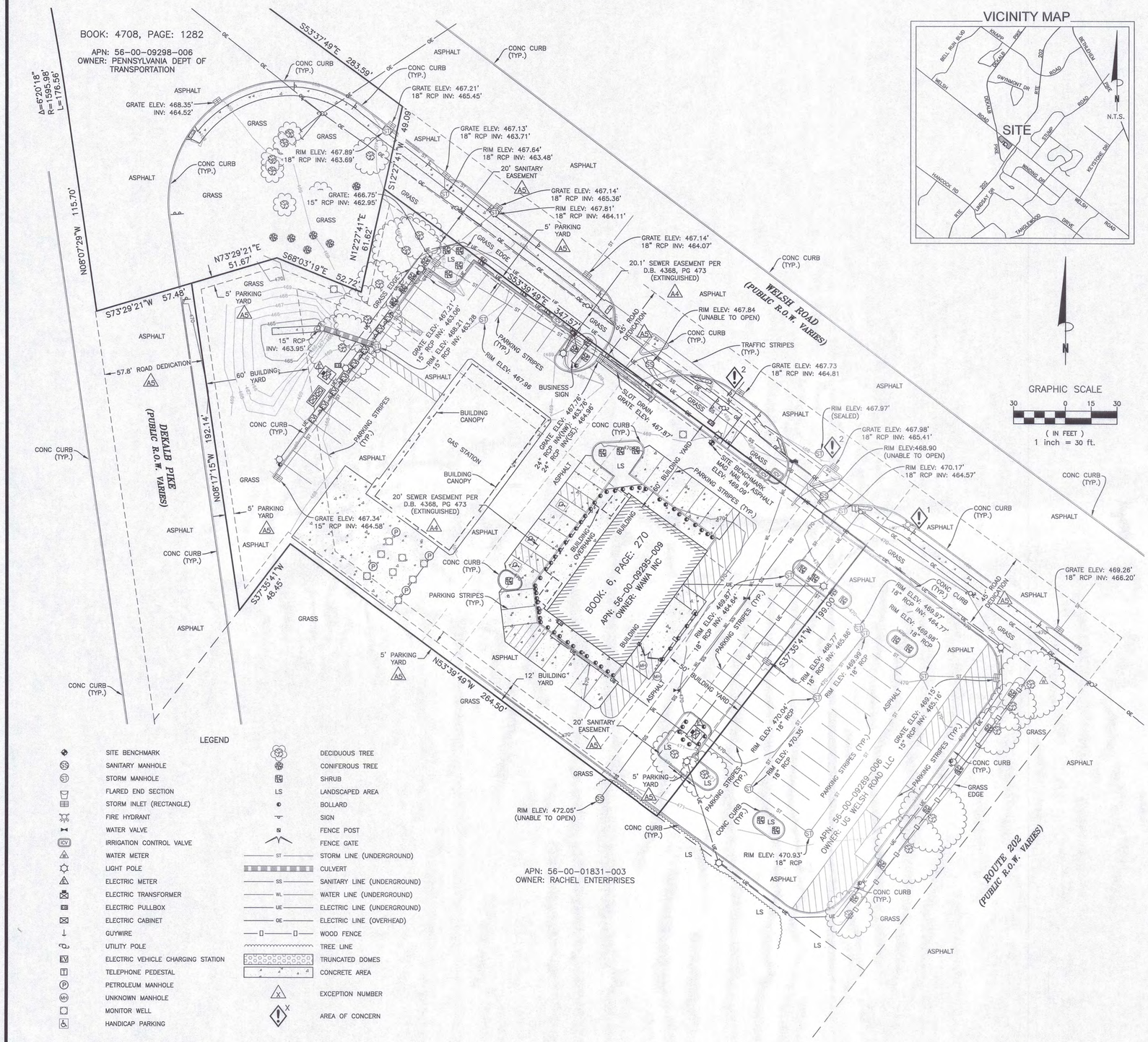

VICINITY MAP

GRAPHIC SCALE

30 0 15 30

(IN FEET)
1 inch = 30 ft.

LEGAL DESCRIPTION (NAX FILE NO. 2022-0109813-PA):

THAT PARCEL OF LAND SHOWN IN PLAT RECORDED ON MARCH 14, 2003, AS BOOK: 6, PAGE: 270, IN THE OFFICIAL PUBLIC RECORDS OF THE MONTGOMERY COUNTY RECORDING OFFICE.

PER DEED RECORDED ON OCTOBER 26, 2001, AS BOOK: 5382, PAGE: 2511 IN THE OFFICIAL PUBLIC RECORDS OF MONTGOMERY COUNTY, PENNSYLVANIA.

APN: 56-00-09295-009

SCHEDULE B2 EXCEPTIONS (NAX FILE NO. 2022-0109813-PA):

Item No.

A1 Subject to Agreement, recorded in book 5453, page 737 in the official records of the Montgomery County Recording Office.
-IS LOCATED ON THE SURVEY AREA, BLANKET IN NATURE.

A2 Subject to Easement contained in Deed, recorded in book 5382, page 2511 in the official records of the Montgomery County Recording Office.
-IS LOCATED ON THE SURVEY AREA, BLANKET IN NATURE.

A3 Subject to Building Entrance Facility Grant, recorded in book 5463, page 224 in the official records of the Montgomery County Recording Office.
-IS LOCATED ON THE SURVEY AREA, NO MATHEMATICAL DESCRIPTION AVAILABLE.

A4 Subject to Extinguishments of Sanitary Sewer Easement, recorded in book 5675, page 83 in the official records of the Montgomery County Recording Office.
-IS LOCATED ON THE SURVEY AREA, AS SHOWN HEREON.

A5 Subject to Plat, recorded in book 6, page 270 in the official records of the Montgomery County Recording Office.
-IS LOCATED ON THE SURVEY AREA, BLANKET IN NATURE AND AS SHOWN HEREON.

Items not listed above are determined non-survey related items and are not plotted hereon.

LEGAL DESCRIPTION (NAX FILE NO. 2022-0109815-PA):

THAT PARCEL OF LAND DESCRIBED IN INDENTURE DEED RECORDED ON MAY 31, 1983, AS BOOK: 4708, PAGE: 1282 IN THE OFFICIAL PUBLIC RECORDS OF THE COUNTY OF MONTGOMERY, PENNSYLVANIA.

APN: 56-00-09298-006

SCHEDULE B2 EXCEPTIONS (NAX FILE NO. 2022-0109815-PA):

Item No.

B1 Subject to Other, recorded in book 5469, page 1123 in the official records of the Montgomery County Recording Office.
-IS LOCATED ON THE SURVEY AREA, BLANKET IN NATURE.

B2 Subject to Plat Map, recorded in book H051, page 00365 in the official records of the Montgomery County Recording Office.
-IS LOCATED ON THE SURVEY AREA, BLANKET IN NATURE.

Items not listed above are determined non-survey related items and are not plotted hereon.

NOTES:

1. This is a topographic map. This is not a boundary survey and is only intended to depict those topographic features or improvements shown. The property lines shown are record lines only and are shown for graphical reference only.
2. Any underground utilities shown have been located from field survey information. The surveyor makes no guarantee that the underground utilities shown comprise all such utilities in the area, either in service or abandoned. The surveyor further does not warrant that the underground utilities shown are in the exact location indicated although he does certify that they are located as accurately as possible from the information available. This site was located by standard RF methods.
3. FEDERAL EMERGENCY MANAGEMENT AGENCY, FEMA FIRMette published April 29, 2022, referencing Flood Insurance Rate Map, Map Number 042091C0276G and Map Number 42091C0278G effective date March 2, 2016, indicates this parcel of land is located in Zone X (Area of minimal flood hazard).
4. This survey does not constitute a title search by Clark Land Surveying, Inc. to determine ownership or easements of record. For all information regarding easements, rights of way and title of record, Clark Land Surveying, Inc. relied upon a Search Report, prepared by Nationwide Abstrax, LLC with a file number of 2022-0109813-PA, dated March 7, 2022 and 2022-0109815-PA, dated March 18, 2022.
5. Elevations are based on NAVD 88 datum.
6. BENCHMARK: MAG nail in asphalt, as shown. Elevation: 469.09' (NAVD 88).
7. BASIS OF BEARINGS: Based upon Pennsylvania State Plane Coordinate System, South Zone, NAD83.
8. Field work for this survey was completed on April 13, 2022.
9. The owner names and tax parcel data shown hereon are based upon the public records available at the original date of this survey. Current ownership and tax parcel data should be verified for accuracy.
10. This site is zoned "C" (Commercial District) per Upper Gwynedd Township Code Enforcement/Building & Zoning Department.
    Building Yards:
    Front: 60', Side: 12', Rear: 50'
    No zoning information provided by the client. Any Zoning setbacks shown hereon are the interpretation of the surveyor. For clarification of exact zoning designations and setback locations, please, contact the Upper Gwynedd Township Code Enforcement/Building & Zoning Department at 215-699-7777.
11. The assessor parcel linework shown hereon is approximate location based upon the current Assessors Map of these parcels.

AREAS OF CONCERN:

1 Unable to locate underground water line on this area.

2 Unable to locate underground storm line on this area.

Surveyor can revise underground utilities shown hereon; if provided with as-built drawings, or utility maps.

SURVEYOR'S STATEMENT:

On the basis of my knowledge, information and belief, I hereby state and declare that this drawing was prepared under my direct supervision to the standard of care of surveyors practicing in the State of Pennsylvania and that the information shown hereon is true and correct to the best of my knowledge and belief.

This statement is neither a warranty nor a guarantee, either expressed or implied.

Gregory L. Condon
Pennsylvania Land Surveyor No. SU-32480-E
For and on behalf of Clark Land Surveying, Inc.

COMMONWEALTH OF PENNSYLVANIA
REGISTERED PROFESSIONAL
GREGORY L. CONDON
LAND SURVEYOR
No. SU-32480-E

5/4/2022

LEGEND

SITE BENCHMARK	DECIDUOUS TREE
SANITARY MANHOLE	CONIFEROUS TREE
STORM MANHOLE	SHRUB
FLARED END SECTION	LANDSCAPED AREA
STORM INLET (RECTANGLE)	BOLLARD
FIRE HYDRANT	SIGN
WATER VALVE	FENCE POST
IRRIGATION CONTROL VALVE	FENCE GATE
WATER METER	STORM LINE (UNDERGROUND)
LIGHT POLE	CULVERT
ELECTRIC METER	SANITARY LINE (UNDERGROUND)
ELECTRIC TRANSFORMER	WATER LINE (UNDERGROUND)
ELECTRIC PULLBOX	ELECTRIC LINE (UNDERGROUND)
ELECTRIC CABINET	ELECTRIC LINE (OVERHEAD)
GUYWIRE	WOOD FENCE
UTILITY POLE	TREE LINE
ELECTRIC VEHICLE CHARGING STATION	TRUNCATED DOMES
TELEPHONE PEDESTAL	CONCRETE AREA
PETROLEUM MANHOLE	EXCEPTION NUMBER
UNKNOWN MANHOLE	AREA OF CONCERN
MONITOR WELL	
HANDICAP PARKING	

Clark Land Surveying, Inc.
177 S. Tiffany Dr., Unit 1 • Pueblo West, CO 81007 • 719.582.1270
www.clarkls.com

Revisions			
No.	Description	By	Date

SITE NAME:
P17773 Wawa North Wales

ENGINEERING DESIGN SURVEY

PORTION OF LANDS DESCRIBED IN
BOOK 5382, PAGE 2511 AND BOOK 4708, PAGE 1282
UPPER GWYNEDD TOWNSHIP, MONTGOMERY COUNTY, PENNSYLVANIA.

Project No. 220942	Drawn By: JSD	Date: 05/03/2022
	Checked By: GLC	Sheet 1 of 1